PC80MR-5

EU Stage V Engine

MIDI-EXCAVATOR

PC80

ENGINE POWER
46,2 kW / 62 HP @ 2.200 rpm

OPERATING WEIGHT
8.000 - 8.270 kg

BUCKET CAPACITY
0,13 - 0,27 m³

Walk-Around

PC80MR-5

ENGINE POWER
46,2 kW / 62 HP @ 2.200 rpm

OPERATING WEIGHT
8.000 - 8.270 kg

BUCKET CAPACITY
0,13 - 0,27 m³

INCREASED FUEL EFFICIENCY AND ENVIRONMENTAL PERFORMANCE

Powerful and Environmentally Friendly

- Low consumption EU Stage V engine
- Komatsu fuel-saving technology
- 6 selectable working modes
- Auto-deceleration and idle shutdown
- Dial type fuel control

First-Class Comfort

- Newly designed cab
- Improved operator convenience
- Multi-function monitor with high resolution 3,5” LCD color display
- Multiple accessories around the operator’s seat

Maximized Efficiency

- New, improved blade design
- Standard 1 or 2 way auxiliary line for attachments and hydraulic quick-coupler line
- Second auxiliary circuit (optional)
- Roadliner (optional)

Safety First

- Neutral position detection system
- Emergency engine stop switch
- Seat belt caution indicator
- Large transport tie down points

Easy Maintenance

- Wide opening engine hood
- Maintenance information displayed on the monitor

KOMTRAX

- Komatsu Wireless Monitoring System
- 3G mobile communications
- Integrated communication antenna

MR-5

Powerful and Environmentally Friendly

Work in tight spaces

The new short-tail PC80MR-5 delivers optimal power and digging speed, even in confined spaces where traditional machines can't work: yards, road works, demolition sites, sewers, etc. Sturdy and very stable, it guarantees maximum safety and offers complete operator confidence in any working conditions.

Komatsu CLSS

The CLSS (Closed-centre Load Sensing System) hydraulic circuit guarantees power, speed and perfect control to all movements, including simultaneous ones. The combination of the variable displacement pump and of CLSS allows operators to perform all required movements with maximum efficiency, regardless of the load or rpm.

6 working modes

Depending on the load, operators can conveniently choose between 6 working modes designed to match engine speed, pump delivery and system pressure. Priority can be given either to speed, for more productivity, or to fuel consumption for lighter applications.

Maximized Efficiency

Customisation

Many configurations are available, so you can choose the perfect machine for the job: long or short arm, rubber, steel or roadliner shoes. The 1 / 2 way auxiliary hydraulic circuit allows the use of a wide range of working tools such as a hammer, a clamshell bucket, an auger etc.

Electronic control system

Fuel consumption on the PC80MR-5 is lower by up to 10%. The engine and hydraulic system are optimally controlled according to the operating conditions. The hydraulic loss reductions also help reduce both fuel consumption and environmental impact.

Auto deceleration and auto idle shutdown

Both these functions are provided as standard. Auto-deceleration reduces the engine speed automatically a few seconds after the work equipment lever is moved to the neutral position. The auto idle shutdown automatically stops the engine after a preset time to reduce unnecessary fuel consumption.

New, improved blade design

Standard 1 or 2 way auxiliary line for attachments and hydraulic quick-coupler line

A reduced front swing radius and boom swing function make trench digging a cinch

First-Class Comfort

PC80MR-5

An optimal work environment

Despite its compact size, the PC80MR-5 offers unequalled comfort. The spacious cab was developed with exceptional care to details, and the work environment is quiet and comfortable. Special attention is given to the operator: ergonomic and dedicated PPC controls, and an efficient air conditioning and ventilation system to guarantee optimal thermal comfort. A much larger cab door makes cab access a lot easier.

Perfect operator convenience

Proportional controls are fitted as standard for safe and precise operation of attachments. The dial type fuel control makes operation and engine speed adjustment simple. The automatic travel speed shift function allows smooth and efficient operation. Pressing a speed selector button on the blade lever chooses auto 2-speed or fixed 1st speed travel for easy shifting during blade operation. A 12-volt power port is also included in the cab.

New multi-function monitor with more information

A high-definition 3,5” LCD monitor provides excellent visibility. The high-definition LCD panel is less affected by the viewing angle and surrounding brightness, ensuring excellent visibility. Various alerts and machine information are displayed in a simple format. Useful information such as operation records, machine setting and maintenance data are also provided. The operator can easily switch screens.

New hinged door for increased accessibility

KOMTRAX

The way to higher productivity

KOMTRAX uses the latest wireless monitoring technology. Compatible on PC, smartphone or tablet, it delivers insightful and cost saving information about your fleet and equipment, and offers a wealth of information to facilitate peak machine performance. By creating a tightly integrated web of support it allows proactive and preventive maintenance and helps to efficiently run a business.

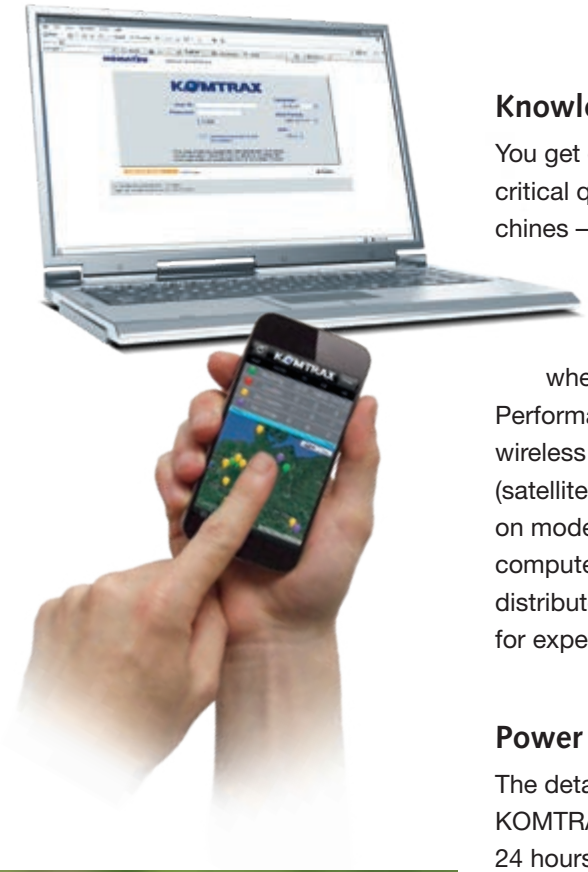

Knowledge

You get quick answers to basic and critical questions about your machines – what they're doing, when they did it, where they're located, how they can be used more efficiently and when they need to be serviced. Performance data is relayed by wireless communication technology (satellite, GPRS or 3G depending on model) from the machine to a computer and to the local Komatsu distributor – who's readily available for expert analysis and feedback.

Power

The detailed information that KOMTRAX puts at your fingertips 24 hours a day, 7 days a week gives the power to make better daily and long-term strategic decisions – at no extra cost. Problems can be anticipated, maintenance schedules customised, downtime minimised and machines kept where they belong: working on the jobsite.

Convenience

KOMTRAX enables convenient fleet management on the web, wherever you are. Data is analysed and packaged specifically for effortless and intuitive viewing in maps, lists, graphs and charts. You can foresee eventual maintenance issues and required spare parts, and troubleshoot a problem before Komatsu technicians arrive on site.

Easy Maintenance

Excellent serviceability

Komatsu designed the PC80MR-5 with an easy access to all service points. Routine maintenance and servicing are less likely to be skipped, which can mean a reduction of costly downtime later on. The radiator, aftercooler and oil cooler are made of aluminium to improve their efficiency and are mounted in parallel for quicker cleaning. The fuel and oil filters as well as the fuel drain valve, are all remote mounted and easily accessible.

Long-life oil filters

The Komatsu Genuine hydraulic oil filter uses high-performance filtering material for long replacement intervals, which significantly reduces maintenance costs.

The multifunction monitor panel with maintenance and service information

Enhanced service access

Generous storage compartment under the cab

Highest Reliability and Safety

Smallest swing radius

The extra-small swing radius with minimum rear protrusion from the tracks (270 mm) allows the operator to concentrate on work in confined areas.

Maintenance monitoring

Maintenance and service activities are tracked on the monitor. When the time before a maintenance interval dips below 30 hours, a maintenance reminder light shows on the display.

Powertilt option

The machine features a dedicated piping for power tilt operation and a double effect hydraulic quick-coupler line. The powertilt installation enhances the versatility of the machine by providing a flexible tool of proven reliability. Piping is routed over the arm for better protection and long lasting design.

Secondary engine shut down switch

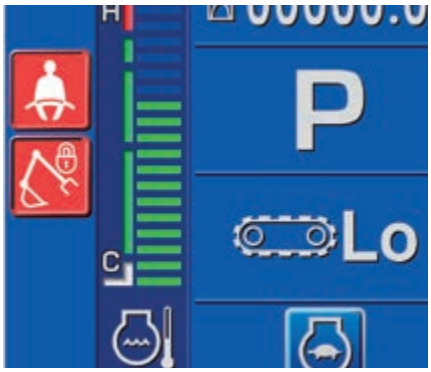

Seat belt caution and neutral position detection caution

Hose burst valves on boom and arm cylinders

Specifications PC80MR-5E0

PC80MR-5

ENGINE

Model	Komatsu 4D98E-5SFB
Type	Water-cooled, 4-cycle direct injection
Engine power	
at rated engine speed	2.200 rpm
ISO 14396	46,2 kW / 62 HP
ISO 9249 (net engine power)	44,2 kW / 59 HP
No. of cylinders	4
Bore × stroke	98 × 110 mm
Displacement	3.319 cm³
Max. torque / engine speed	235 Nm / 1.400 rpm
Air filter type	Dry

HYDRAULIC SYSTEM

Type	Komatsu CLSS
Main pumps	
Pump for	Boom, arm, bucket and travel
Type	Variable displacement, axial piston
Maximum pump flow	178 l/min
Max. operating pressure	26,5 MPa (270 bar)
Pump for	Swing and blade
Type	Fixed displacement gear pump
Maximum pump flow	72 l/min
Max. operating pressure	20 MPa (204 bar)
Auxiliary hydraulic flow (optional)	125 l/min
Relief valve setting	
Swing and blade	20 MPa (204 kg/cm²)
Travel and work equipment	26,5 MPa (270 kg/cm²)
Bucket digging force (ISO 6015)	5.855 daN (5.970 kgf)
Arm crowd force (ISO 6015)	3.913 daN (3.990 kgf)

OPERATING WEIGHT (APPR.)

	Mono boom	Two-piece boom
Steel shoes	8.090 kg	8.270 kg
Rubber shoes	8.000 kg	8.180 kg
Roadliner shoes	8.070 kg	8.250 kg

Operating weight, including 1.650 mm arm, 0,20 m³ bucket (ISO 7451), blade, operator, liquids, filled tank and standard equipment (ISO 6016).

BUCKET RANGE

Bucket capacity	0,128 m³	0,171 m³	0,2 m³	0,232 m³	0,265 m³
Bucket width	400 mm	500 mm	600 mm	700 mm	800 mm
Bucket weight	130 kg	142 kg	155 kg	168 kg	180 kg

DRIVES AND BRAKES

Steering control	2 levers with pedals giving full independent control of each track
Drive method	Hydrostatic
Hydraulic motors	Variable displacement, axial piston
Parking brake	Mechanical discs
Max. travel speeds	
Lo / Hi	2,9 / 4,9 km/h
Maximum drawbar pull	7.279 daN (7.420 kgf)

UNDERCARRIAGE

Construction	X-frame centre section with box section track frames
Rollers	
Track rollers (each side)	5
Carrier rollers (each side)	1
Shoes (each side)	39
Shoe width	450 mm
Ground pressure (standard)	0,36 kg/cm²

SWING SYSTEM

Driven by	Hydraulic motor
Swing reduction gear	Double epicyclical reduction
Swing circle lubrication	Grease-bathed
Swing brakes	Automatic, with oil immersed discs
Swing speed	10,0 rpm

BLADE

Width × height	2.250 × 464 mm
Blade, max. lifting height	473 mm
Blade, max. digging depth	470 mm

SERVICE REFILL CAPACITIES

Fuel tank	110 l
Radiator	11,6 l
Engine oil	9,0 l
Hydraulic oil tank	65 l

ENVIRONMENT

Engine emissions	Fully complies with EU Stage V exhaust emission regulations
Noise levels	
LwA external	98 dB(A) (2000/14/EC Stage II)
LpA operator ear	73 dB(A) (ISO 6396 dynamic test)
Vibration levels (EN 12096:1997)	
Hand/arm	≤ 2,5 m/s² (uncertainty K = 1,2 m/s²)
Body	≤ 0,5 m/s² (uncertainty K = 0,2 m/s²)

Contains fluorinated greenhouse gas HFC-134a (GWP 1430). Quantity of gas 1,1 kg, CO_2 equivalent 1,57 t.

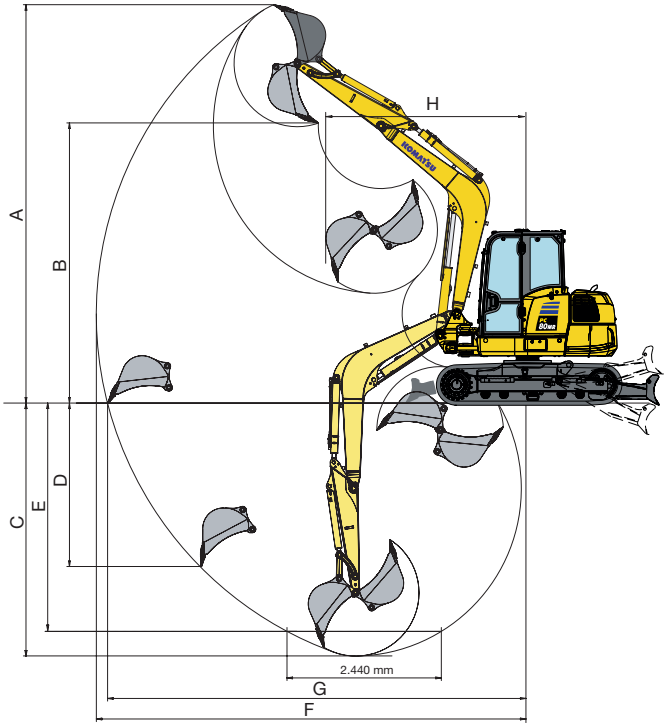

	MONO BOOM		TWO-PIECE BOOM	
	Arm length 1.650 mm	Arm length 2.000 mm	Arm length 1.650 mm	Arm length 2.000 mm
J	2.210 mm	2.620 mm	2.345 mm	2.565 mm
K	4.665 mm	4.865 mm	4.660 mm	4.900 mm
L	6.060 mm	6.260 mm	6.055 mm	6.295 mm

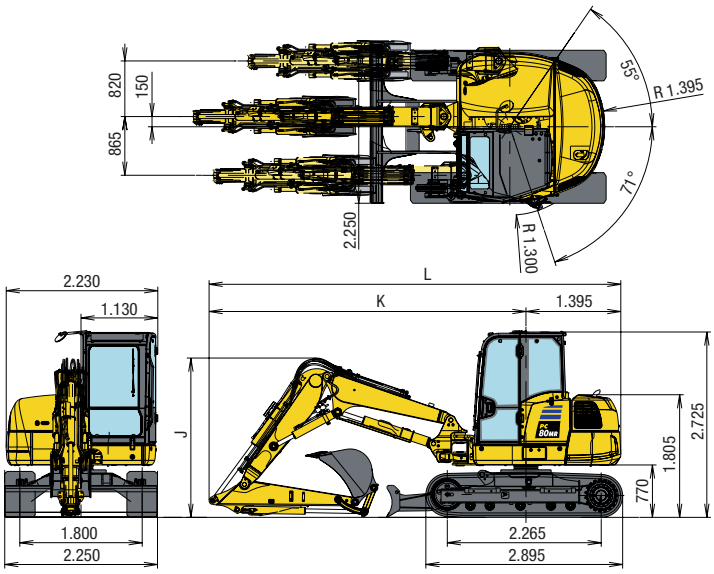

WORKING RANGE

		MONO BOOM		TWO-PIECE BOOM	
	Arm length	1.650 mm	2.000 mm	1.650 mm	2.000 mm
A	Max. digging height	6.315 mm	6.560 mm	7.585 mm	7.915 mm
B	Max. dumping height	4.390 mm	4.620 mm	5.600 mm	5.925 mm
C	Max. digging depth	3.975 mm	4.325 mm	3.980 mm	4.335 mm
D	Max. vertical wall digging depth	2.885 mm	3.215 mm	3.140 mm	3.450 mm
E	Max. digging depth of cut for 2,44 m level	3.620 mm	4.015 mm	3.820 mm	4.180 mm
F	Max. digging reach	6.775 mm	7.120 mm	7.380 mm	7.725 mm
G	Max. digging reach at ground level	6.595 mm	6.945 mm	7.215 mm	7.570 mm
H	Min. swing radius (at max. boom swing)	2.730 (1.925) mm	2.755 (1.945) mm	2.565 (1.755) mm	2.630 (1.820) mm

LIFTING CAPACITIES

Mono boom, blade up, 151 kg bucket

Arm length	A / B		Max.		5,0 m		4,0 m		3,0 m	
1.650 mm	4,5 m	kg	1.360	1.070						
	3,0 m	kg	1.010	780	1.270	990	*1.533	1.470		
	1,5 m	kg	910	690	1.200	930	1.710	1.330	2.700	2.080
	0,0 m	kg	940	710	1.150	880	1.610	1.240	2.550	1.930
	- 1,5 m	kg	1.170	890			1.600	1.020	2.550	1.940
	- 3,0 m	kg	*1.970	*1.970					*1.980	*1.980
2.000 mm	4,5 m	kg	1.170	920	1.139	1.030				
	3,0 m	kg	900	620	1.280	1.000				
	1,5 m	kg	820	620	1.210	930	1.730	1.350	2.770	2.140
	0,0 m	kg	840	568	1.140	812	1.610	1.230	2.275	1.728
	- 1,5 m	kg	1.000	685	1.110	794	1.570	1.200	2.248	1.701
	- 3,0 m	kg	1.770	1.226					2.328	1.773

Two-piece boom, blade up, 151 kg bucket

Arm length	A / B		Max.		5,0 m		4,0 m		3,0 m	
1.650 mm	4,5 m	kg	818	608	1.103	896	*1.103	1.354		
	3,0 m	kg	630	473	983	795	1.504	1.223	2.860	2.210
	1,5 m	kg	555	375	885	656	1.260	1.005		
	0,0 m	kg	584	406	860	651	1.279	950	*1.960	1.660
	- 1,5 m	kg	701	496	860	651	1.288	950	2.320	1.700
	- 3,0 m	kg					459	*461		
2.000 mm	4,5 m	kg	465	630	*1.550	980	*1.720	1.510		
	3,0 m	kg	341	490	*1.710	920	*2.100	1.380	*2.250	*2.250
	1,5 m	kg	296	430	*1.930	810	*2.640	1.170		
	0,0 m	kg	322	440	*1.847	730	*2.185	1.040	*1.990	1.630
	- 1,5 m	kg	380	530	*1.519	720	*1.766	1.020	*2.950	1.660
	- 3,0 m	kg	270	*520			*806	*1.000	*1.240	*1.240

A Reach from swing centre
B Bucket hook height

Rating over front
Rating over side

Lifting capacities, including bucket, bucket linkage and bucket cylinder

Ratings are based on ISO standard 10567. Rated loads do not exceed 87% of hydraulic lift capacity or 75% of tipping load. Excavators used in object handling operations must comply with the related local regulations and must be equipped with hose burst valves (boom & arm) and an overload warning device in compliance with EN474-5.
- The values marked with an asterisk (*) are limited by the hydraulic capacities.
- Calculations are based on the machine resting on a uniform and firm surface.
- The lifting point is a hypothetical hook placed behind the bucket.

Standard and Optional Equipment

PC80MR-5

ENGINE

Komatsu 4D98E-5SFB water-cooled, 4-cycle direct injection diesel engine	●
EU Stage V compliant	●
Diesel Particulate Filter (DPF)	●
Fuel control dial	●
Auto-deceleration function	●
Auto idle shutdown	●
Alternator 12 V / 80 A	●
Starter motor 12 V / 3,0 kW	●
Battery 12 V / 110 Ah	●

HYDRAULIC SYSTEM

6-working mode selection system; power mode, economy mode, breaker mode, attachment power and attachment economy mode, and lifting mode	●
Adjustable PPC wrist control levers for arm, boom, bucket and swing, with proportional control for attachments	●
PPC control lever and pedals for steering and travel	●
Hydraulic line for hammer and for 2-way equipment up to boom and arm, including preparation for hydraulic quick-coupler (HCU-B)	●
Change-over valve on bucket cylinder for clamshell bucket utilization	●
Automatic two-speed travel control	●
Relief valves on service spool	●
2nd auxiliary hydraulic circuit (HCU-D)	○
3rd auxiliary circuit for hydraulic Powertilt	○

UNDERCARRIAGE

450 mm rubber shoes	●
Track roller guard (not with rubber shoes)	●
450 mm roadliner shoes	○
450 mm steel shoes	○

CABIN

ROPS (ISO 3471) / OPG (ISO 10262) level 1 cab with skylight, pull-up type front window with locking device, lower window, front window wiper with intermittent feature, floor mat	●
Adjustable suspension seat with seat belt	●
Monitor panel 3,5” colour display	●
12 Volt power supply	●
Beverage holder and magazine rack	●
Air conditioning	●
Radio equipment	●
Radio	○

SERVICE AND MAINTENANCE

Multi-function video compatible colour monitor with Equipment Management and Monitoring System (EMMS) and efficiency guidance	●
Battery main switch	●
KOMTRAX – Komatsu wireless monitoring system (3G)	●

WORK EQUIPMENT

Mono boom (3.200 mm)	●
Boom cylinder protection guard	●
1.650 mm digging arm	●
Blade	●
Blade cylinder safety guard	●
Protection for boom safety valve	●
Protection for arm safety valve	●
Two-piece boom (2.240 - 4.030 mm)	○
2.000 mm digging arm	○

SAFETY EQUIPMENT

Travel acoustic alarm	●
Electric horn	●
Rear-view mirrors (left and right side, right rear)	●
Hose burst valves on boom and arm cylinders	●
Overload warning device	●
Emergency engine stop switch	●
Neutral position detection system	●
Seat belt caution indicator	●
Rotating beacon	●
Bucket linkage with lifting eye	○

LIGHTING SYSTEM

Working light on boom	●
Two front working lights on cab	●
Rear working light on cab	●
LED working lights	○
Additional working light on boom	○
Additional LED working light on boom	○

OTHER EQUIPMENT

Standard colour scheme and decals	●
Parts book and operator manual	●
Electric refuelling pump with automatic shut-off function	●
Track frame undercover	○
Special waxing	○

ATTACHMENTS

Bucket range (400 - 800 mm)	○

The PC80MR-5 is equipped in accordance with the safety regulations of the machinery guidelines 89/392 EWG ff and EN474.

● standard equipment
○ optional equipment

Your Komatsu partner:

Komatsu Europe International N.V.
Mechelsesteenweg 586
B-1800 VILVOORDE (BELGIUM)
Tel. +32-2-255 24 11
Fax +32-2-252 19 81
www.komatsu.eu

WENSS08501 05/2019

KOMATSU is a trademark of Komatsu Ltd. Japan.

Printed in Europe – This specification sheet may contain attachments and optional equipment that are not available in your area.
Please consult your local Komatsu distributor for those items you may require. Materials and specifications are subject to change without notice.
AdBlue® is a registered trademark of Verband der Automobilindustrie e.V.