E-series

Articulated Dump Trucks

B35E | B40E | B45E | B50E | Mk 3

Stage V Certified

BELL

E is for evolution

Your business is our business. Bell Articulated Dump Trucks haul more, for longer at the lowest cost-per-ton to deliver more on your profit margins.

As a global leader in Articulated Dump Trucks, Bell Equipment brings you the world class E-series range. The evolutionary E-series is packed with class leading features that deliver production boosting payloads, lower daily operating costs, superior ride quality and uncompromised safety standards. Bell E-series ADTs will give your business the competitive edge you need.

Specifications	B35E	B40E	B45E	B50E
Gross power	320 kW (429 hp)	380 kW (510 hp)	390 kW (523 hp)	430 kW (577 hp)
Operating mass				
Empty	30 379 kg (66 974 lb)	32 233 kg (71 062 lb)	32 326 kg (71 267 lb)	35 675 kg (78 650 lb)
Loaded	63 879 kg (140 829 lb)	71 233 kg (157 042 lb)	73 326 kg (161 656 lb)	81 075 kg (178 740 lb)
Rated payload	33 500 kg (73 855 lb)	39 000 kg (85 980 lb)	41 000 kg (90 390 lb)	45 400 kg (100 090 lb)
2:1 heaped capacity	20,5 m^3 (27 yd^3)	24 m^3 (31 yd^3)	25 m^3 (33 yd^3)	27,5 m^3 (36 yd^3)

- Extensive use of high-strength, lightweight materials give these trucks the best payload-to-mass ratios and hauling efficiencies in each class.

- With their oscillating frame and high-floatation tyres, Bell trucks won't leave you stuck on muddy, rutted or hilly terrain.

- The redesigned sound-suppressed cab features fatigue-beating controls, advanced diagnostic monitor and a sealed-switch module for convenient, fingertip operation of numerous functions.

- Fuel-efficient emission-certified engines deliver clean power without compromise in all conditions. Leading-edge emissions technology ensures rapid engine response and dependable cold-start performance.

The new E-series range takes ADT functionality to new industry standards, with customer-focused enhancements and the highest level of automated machine protection available.

Through substantial investments in Research and Development and employing industry leading technology, advancements have been made in the key areas of performance and fuel efficiency – helping you to move more material at lower operating costs and environmental impact.

Building on pedi

Building on from the D-series platform, Bell Equipment's evolutionary approach to design delivers optimised power-to-weight ratio and legendary fuel efficiency.

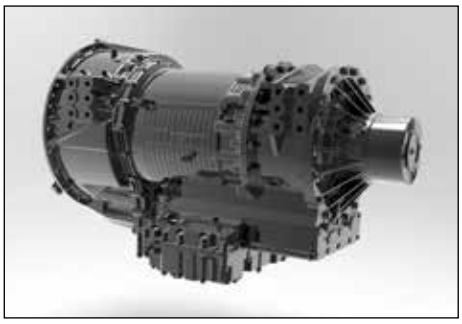

Planetary powershift transmission optimises shift points to match conditions and vehicle weight while protecting the transmission from operator error and abuse. Allison FuelSense calibration optimises production and fuel burn.

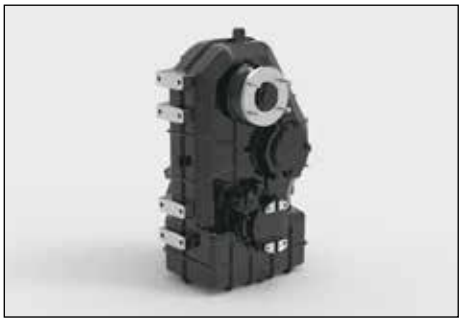

The transfer case inter-axle differential delivers equal torque to each axle when traction is favourable. When conditions deteriorate, the diff-lock automatically engages to deliver torque to the tyres that can best use it.

High-strength steel and widely spaced taper roller bearings in the articulation area enhance long-term durability.

A tailgate is available as an option for better material retention. The tailgate opens as the bin is raised for dumping. Spring steel straps maintain positive seal throughout the haul, ensuring minimal material is lost.

- Automatic Traction Control (ATC) is achieved with speed sensors providing feedback to the truck on-board computer. The computer then controls differential lock activation as needed. This coupled with best in class rear suspension travel results in unparallelled off-road ability.
- Optimised payload-to-weight ratio decreases your cost per tonne because more of your fuel cost is spent moving the material, not running the machine.
- An industry leading, fully automatic seven-speed planetary transmission with torque converter lock-up maximises fuel efficiency.
- Automatic retardation slows the truck when the operator backs off the accelerator pedal for more confidence on steep grades.
- Electronic common rail fuel system provides high injection pressures even at low engine speed for improved cold-starting ability, low-speed response and reduced emissions.
- Careful engine packaging and front chassis design gives the best approach angle to allow these ADTs to attack steep terrain.
- High-travel suspension keeps all tyres in constant contact with the ground, for optimum traction.

igree

• Improved payloads, faster haul cycles and industry leading fuel economy all help you move more material at a lower-cost-per-tonne than your competitors.

Our innovative front and rear comfort ride suspension options are offered to even further enhance ride quality and ensure minimal whole body vibration exposure.

Productivity increases through reduced cycle times, and reduced haul road maintenance are even further benefits of these extremely successful systems. Experienced ADT operators who have driven trucks installed with these systems have come away amazed by the comfort of the machine, as well as the confidence that the adaptive front suspension engenders.

Uncompromised durability

Built smarter, to work harder. Bell ADTs offer optimised machine weights so you spend more time and money moving material and not running the machine.

With decades of ADT experience, the new Bell E-series articulated hauler is designed and manufactured using purpose built, reliable Bell components best suited for the toughest of conditions. The central oscillation joint, high suspension travel on all axles, and balanced weight distribution provide the agility and ability to navigate hostile terrain.

The high-strength steel chassis delivers strength and rigidity without excess weight.

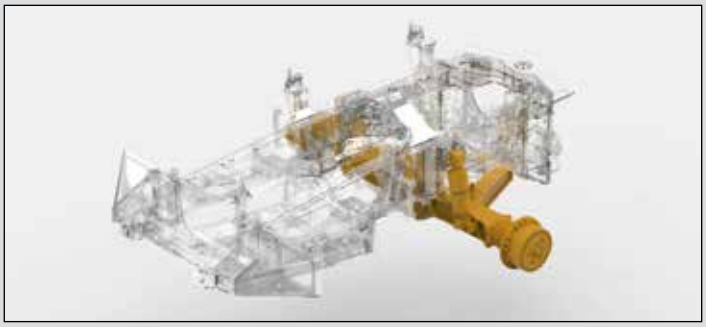

For comfortable productivity, the A-frame suspension system coupled with hydropneumatic suspension struts reduce the lateral vibration often experienced with off-road conditions. A superior suspension seat provides additional isolation for the operator.

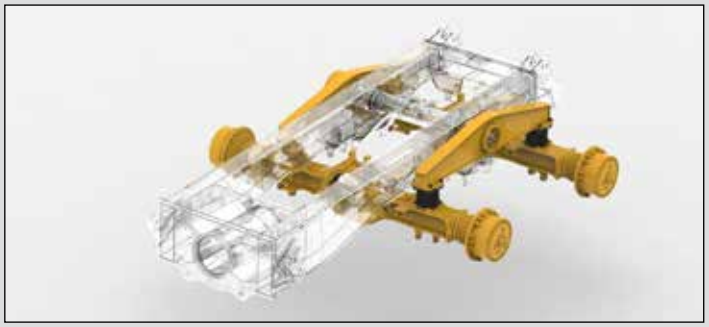

Rough terrain demands tough suspensions. Heavy-duty components absorb shocks and come back for more. You get best-in-class suspension travel and ground clearance, too.

- Fully enclosed, flooded, dual circuit wet disc brakes offer superior braking performance and extended service life essential for wet and muddy conditions. Oil-immersed wet-disc brakes are virtually maintenance-free and now feature a high flow circulation system with filtration and cooling.

- Viscous electronically controlled direct-drive engine fans provide cooling for the best efficiency.

- Class leading engine braking, coupled with automated brake retardation, provides superior braking power. Brake retardation is at pressures low enough to ensure no contact between the wet brake plates, and therefore no wear.

Other uptime-boosting features include world class on-board diagnostics with live stream functionality, solid-state sealed switches and satellite fleet management system.

High-strength welded-alloy steel chassis and reinforced articulation joints, offer superior strength and durability with optimised weight for class leading power-to-weight ratio. Lower machine mass reduces powertrain and structural stress.

Run leaner and

A combination of an optimally tuned engine and weight optimised complete machine package ensure that Bell ADTs have a minimal carbon footprint.

SCR uses AdBlue®/DEF which

- is non-toxic, odourless, low cost and simple to refill.
- is injected into the flow of the exhaust gases and reacts with the NOx gases in the catalytic convertor to form harmless nitrogen and water.
- is consumed at approximately 3-5% of your fuel usage.

EGR

- Recirculates burnt exhaust gas back into the combustion chamber, lowering combustion temperatures and NOx production.

DPF

- Our DPF technology has been used in Mercedes-Benz road trucks for over 10 years.
- Regeneration is done during normal operation as much as possible.
- In light applications stationary active regeneration may be necessary.

- Reduced emissions
- Improved engine efficiency
- Lower fuel consumption
- Improved power
- Improved torque
- Improved engine response

cleaner

• Stage V emissions control coupled with the lowest fuel burn ensures the lowest environmental impact.

Our E-series truck platform easily accommodates the new engine and related emissions control technology and reflects our strategy of continuous improvement.

Bell Equipment's evolutionary E-series runs SCR-technology (Selective Catalytic Reduction) in combination with EGR and a diesel particulate filter (DPF) to give an industry leading standard in fuel-efficient emission control, designed specifically for the off-highway market to be compliant to Stage V. Engine power and fuel consumption have been further optimised through event dependant software that controls retardation, cooling and charging of accumulators.

Operate with ease

Using the latest in automotive technology and state-of-the-art tooling, the E-series takes operator experience to new heights.

Climb into the cab of a Bell ADT and you will feel right at home. Its quiet, spacious interior, ergonomically positioned operator station and climate-controlled cabin is loaded with productivity-boosting comfort and convenience features that minimise operator fatigue and enhance the operator's experience. Modern flowing lines, in keeping with current styling trends on road vehicles, offer unsurpassed levels of visibility.

From the state-of-the-art 10" full colour screen, automotive mouse interface and sealed switch module with centrally located sealed display unit to air suspension seat, tilt/telescoping steering wheel and optional CD player with high-output speakers, the E-series provides everything your operators need to perform at their best.

Easy-to-understand instruments and intuitive controls wrap around the operator so they're easier to view and operate.

A user friendly 10" colour monitor offers vital operating information, safety warnings, detailed diagnostic readings and dump body function settings.

An automotive controller provides menu navigation on the colour monitor to extract information on machine operation and adjustment of machine settings.

Convenient sealed switch module provides fingertip control of numerous productivity enhancing functions including: **Keyless Start, I-Tip, Dump Body Upper Limit, Soft Stop/Hard Stop Selection, Retarder Aggressiveness and Speed Control.**

- The standard sound-suppression package significantly reduces noise levels and operator fatigue.
- The adaptive transmission control adjusts clutch engagement to ensure smooth, consistent shifts throughout the life of the truck.
- A fully adjustable air-suspension seat with variable damping, auto height adjust according to operator weight, pneumatic lumbar support and multipoint harness for class-leading comfort and safety.
- A purpose designed HVAC climate-control system with automotive-style louvres keeps the glass clear and the cab comfortable.
- New machine styling and cabin design improvements, which include full glass access door and high visibility mirror package, provide exceptional all-round visibility.
- You won't find retarder pedals or levers in a Bell truck. Retarder aggressiveness is simply set on the switch pad. Or Hill Descent Control can set it for you automatically.

Safety, our busi
too

By listening to users and delivering on expectations in an ever changing workplace, we provide a truck that leads in application safety with numerous groundbreaking innovations.

Independent features such as Keyless Start, Hill Assist, Bin Tip Prevention, Auto Park Application (APA), Standard Turbo Spin Protection and On-Board Weighing (OBW) are still standard on the E-series. For improved safety and productivity, the E-series has Automatic Traction Control (ATC).

- Full handrails (to ISO 2876) installed to offer improved safety when performing engine checks.
- The park brake automatically applies when neutral is selected and it is not possible to engage neutral at speed. Torque dependent park brake release (Hill Assist) ensures no roll back on slopes.
- Best-in-class retarder and engine braking automatically applies when the operator lifts his foot off the accelerator. Retarder aggressiveness can be simply adjusted on the sealed switch module ensuring maximum descent control for all conditions.
- All trucks can be set up to automatically sound the horn when starting or switching between forward and reverse.
- Multiple geofencing in challenging site conditions ensures safe machine operation, such as downhill speed control, geofence speed limits and bin restrictions.

Our quiet operator cabins are ROPS/FOPS certified with an air suspension operator seat. The trainer seat has a retractable lap belt while the operator seat has a standard 3 point seat belt. Both have automatically locking retractors.

A standard integrated reverse camera and high visibility mirrors ensure superior all round visibility.

Keyless start, driver identity and access codes ensure no unauthorised operation of your equipment.

ness

The exclusive on-board weighing presents the operator with real time information on the payload while the machine is being loaded. A 'speed restriction' mode can also be activated if the machine is significantly overloaded.

The incorporation of a pitch and roll sensor in the vehicle prevents bin operation if the truck is in an unsafe position.

Both operator or site selectable maximum speed control allows the vehicle to automatically decelerate and apply the retarder to prevent onsite speeding.

Maximise your uptime

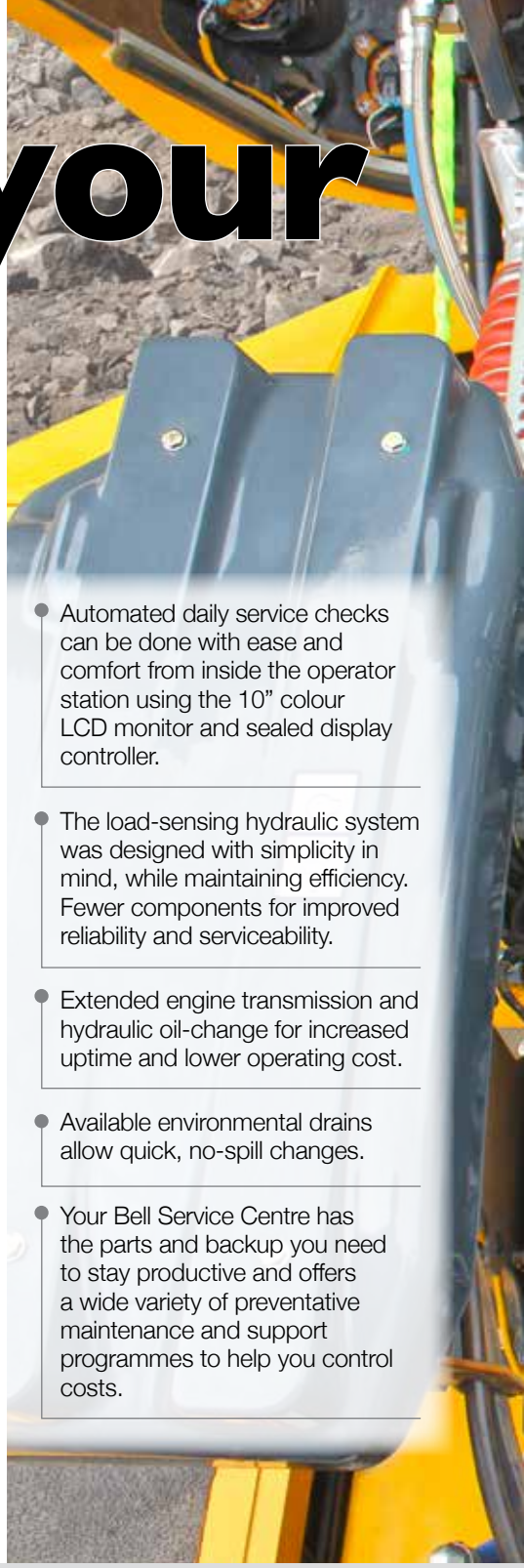

The E-series is loaded with features that make it as easy to maintain as it is to operate. Spend less time and expense getting ready for work and more time getting work done.

Easy-to-reach dipsticks and grouped service points make quick work of the daily routine. Quick-change filters, extended engine and hydraulic oil-service intervals lower daily operating costs and provide superior machine uptime. An industry leading 10” colour monitor offers on-board machine diagnostics as well as automated daily service functionality, this coupled with diagnostic test ports help you troubleshoot and make informed maintenance decisions on site.

- Automated daily service checks can be done with ease and comfort from inside the operator station using the 10” colour LCD monitor and sealed display controller.
- The load-sensing hydraulic system was designed with simplicity in mind, while maintaining efficiency. Fewer components for improved reliability and serviceability.
- Extended engine transmission and hydraulic oil-change for increased uptime and lower operating cost.
- Available environmental drains allow quick, no-spill changes.
- Your Bell Service Centre has the parts and backup you need to stay productive and offers a wide variety of preventative maintenance and support programmes to help you control costs.

If something goes wrong, the diagnostic monitor provides service codes and supporting info to help diagnose the problem.

The cab can be tilted in minutes without special tools, for convenient service access to drivetrain components.

An in-cab load centre simplifies fuse replacement. Fewer relays, connectors and harnesses mean higher reliability.

We offer a remote transmission filter option. They make transmission filter replacement a fast and clean task.

Through the comprehensive installation of level gauges and sensors, a large number of daily checks can be done from the convenience of the operator station.

Easily accessible test ports allow technicians to trouble-shoot problems more quickly.

The centralised lube bank places difficult-to-reach grease points within reach.

The convenient and easy to understand RSG decal details daily checks and actions (eg: greasing).

Welcome to the ... BELL Family

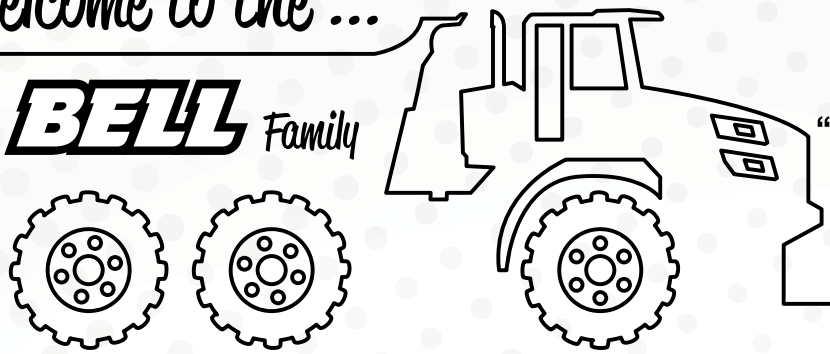

"Power up and plug in to our end-to-end customer solutions!"

START

Through our living motto **'Strong Reliable Machines, Strong Reliable Support'**, we offer both exceptional equipment and aftermarket support products because we want your Bell ownership experience to be a happy one.

SETTING YOU UP FOR SUCCESS

- TRAINING

PROTECTING YOUR ASSETS

- LUBECHECK
- MAINTENANCE CONTRACT
- EXTENDED WARRANTY
- FLEETM@TIC®

KEEPING YOUR MACHINE RUNNING

- TECHNICAL SUPPORT
- LUBRICANTS
- SPECIAL TOOLS
- PARTS
- BELL OUTLETS
- SERVICE KITS

GIVING YOU EXTRA VALUE, LONGER LIFE

- REMAN COMPONENTS
- PRE-OWNED EQUIPMENT

SUPPORTING YOU EVERY STEP OF YOUR BELL OWNERSHIP EXPERIENCE

Smarter fleet management

Cutting edge technology, helping you run your fleet smarter. Providing accurate, up-to-date operational data, production data and diagnostic data.

The key to a productive and profitable fleet, lies in the abillity to monitor and manage your machines and operators efficiently. Machine operational data is processed and compiled into useful production and performance statistics, accessible via the Bell Fleetm@tic® website. These reports are also automated and emailed directly to you. The two monitoring packages that we have available, are:

• **The Classic Package** supplies you with good enough information for you to have a very good understanding of how your machines is operating for each shift that it runs. This package comes standard with the machine for 2 years.

• **The Premium Package** is focused on customers who need to have extremely detailed information of the machine's operation. For this package we offer similar information to that of the Classic Package but for each individual laden - unladen cycle. In addition, live tracking is available on the Fleetm@tic® website on a per minute basis.

Fleetm@tic®:

- Maximise productivity
- Generate machine utilisation reports
- Identify operator training requirements
- Pro-active maintenance planning
- Implement safety features
- Receive machine fault codes as well as suggested trouble shooting procedures
- Protect investments
- Receive real time geospatial data

Technical Data - B35E

ENGINE

Manufacturer
Mercedes Benz (MTU)

Model
OM471LA (MTU 6R 1300)

Configuration
Inline 6, turbocharged and intercooled.

Gross Power
320 kW (429 hp) @ 1 700 rpm

Net Power
301 kW (404 hp) @ 1 700 rpm

Gross Torque
2 100 Nm (1 549 lbft) @ 1 300 rpm

Displacement
12,8 litres (781 cu.in)

Auxiliary Brake
Exhaust Valve Brake

Fuel Tank Capacity
352 litres (93 US gal)

AdBlue® Tank Capacity
40 litres (11 US gal)

Certification
OM471LA (MTU 6R 1300) meets EU Stage V emissions regulations.

TRANSMISSION

Manufacturer
Allison

Model
4700 ORS

Configuration
Fully automatic planetary transmission.

Layout
Engine mounted

Gear Layout
Constant meshing planetary gears, clutch operated

Gears
7 Forward, 1 Reverse

Clutch Type
Hydraulically operated multi-disc

Control Type
Electronic

Torque Control
Hydrodynamic with lock-up in all gears.

TRANSFER CASE

Manufacturer
Kessler

Series
W2400

Layout
Remote mounted

Gear Layout
Three in-line helical gears

Output Differential
Interaxle 29/71 proportional differential. Automatic inter-axle differential lock.

AXLES

Manufacturer
Bell

Model
30T

Differential
High input controlled traction differential with spiral bevel gears

Final Drive
Outboard heavy duty planetary on all axles.

BRAKING SYSTEM

Service Brake
Dual circuit, full hydraulic actuation wet disc brakes on front and middle axles. Wet brake oil is circulated through a filtration and cooling system.

Maximum brake force:
352 kN (79 133 lbf)

Park & Emergency
Spring applied, air released driveline mounted disc.

Maximum brake force:
206 kN (46 311 lbf)

Auxiliary Brake
Automatic engine valve brake. Automatic retardation through electronic activation of wet brake system.

Total Retardation Power
Continuous: 442 kW (593 hp)
Maximum: 834 kW (1 118 hp)

WHEELS

Type
Radial Earthmover

Tyre
26.5 R 25

FRONT SUSPENSION

Semi-independent, leading A-frame supported by hydro-pneumatic suspension struts.

Option: Electronically controlled adaptive suspension with ride height adjustment.

REAR SUSPENSION

Pivoting walking beams with laminated rubber suspension blocks.

Option: Comfort Ride suspension walking beams, with two-stage sandwich block.

HYDRAULIC SYSTEM

Full load sensing system serving the prioritized steering, body tipping and brake functions. A ground-driven, load sensing emergency steering pump is integrated into the main system.

Pump Type
Variable displacement load sensing piston

Flow
330 L/min (87 gal/min)

Pressure
315 bar (4 569 psi)

Filter
5 microns

STEERING SYSTEM

Double acting cylinders, with ground-driven emergency steering pump.

Lock to lock turns
5

Steering Angle
42°

DUMPING SYSTEM

Two double-acting, single stage, dump cylinders.

Raise Time
11 seconds

Lowering Time
6 seconds

Tipping Angle
70 deg standard, or any lower angle programmable

PNEUMATIC SYSTEM

Air drier with heater and integral unloader valve, serving park brake and auxiliary functions.

System Pressure
810 kPa (117 psi)

ELECTRICAL SYSTEM

Voltage
24 V

Battery Type
Two AGM (Absorption Glass Mat) type.

Battery Capacity
2 X 75 Ah

Alternator Rating
28V 80A

MAX. VEHICLE SPEED

1st	7 km/h	4 mph
2nd	15 km/h	9 mph
3rd	22 km/h	14 mph
4th	34 km/h	21 mph
5th	45 km/h	28 mph
6th	51 km/h	32 mph
R	6 km/h	4 mph

CAB

ROPS/FOPS certified 76 dBA internal sound level measured according to ISO 6396.

Load Capacity & Ground Pressure

OPERATING WEIGHTS		GROUND PRESSURE*		LOAD CAPACITY		OPTION WEIGHTS	
UNLADEN	kg (lb)	LADEN		BODY	m^3 (yd^3)		kg (lb)
Front	16 279 (35 889)	(No sinkage/Total Contact Area Method)		Struck Capacity	16 (21)	Bin liner	1 216 (2 681)
Middle	7 341 (16 184)	26.5 R 25	kPa (Psi)	SAE 2:1 Capacity	20,5 (27)	Tailgate	906 (1 997)
Rear	6 759 (14 901)	Front	361 (52)	SAE 1:1 Capacity	24,5 (32)		
Total	30 379 (66 974)	Mid & Rear	379 (55)	SAE 2:1 Capacity		EXTRA WHEELSET	
LADEN				with Tailgate	21 (28)	26.5 R 25	672 (1 482)
Front	20 232 (44 602)						
Middle	22 114 (48 755)			Rated Payload	33 500 kg		
Rear	21 533 (47 472)				(73 855 lb)		
Total	63 879 (140 829)						

* All Groundpressures calculated with Michelin XADN+ Tyre

Dimensions

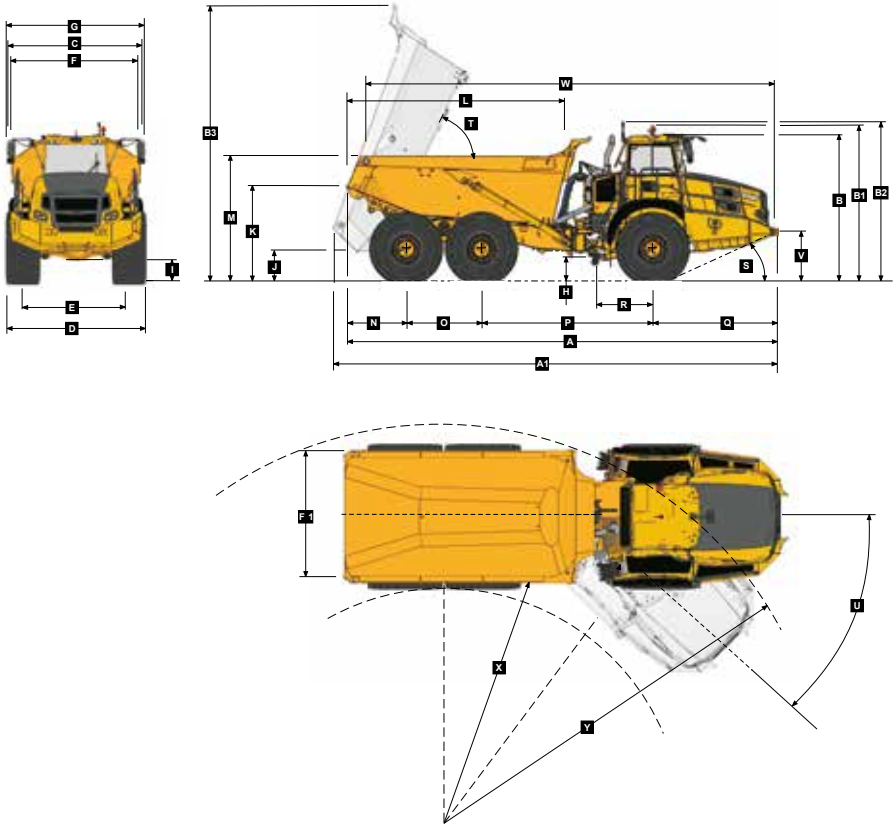

Machine Dimensions

A	Length - Transport Position with Tailgate	11268 mm	(37 ft.)
A	Length - Transport position w/o Tailgate	11188 mm	(36 ft. 8 in.)
A1	Length - Bin Fully Tipped	11631 mm	(38 ft. 2 in.)
B	Height - Transport Position	3752 mm	(12 ft. 4 in.)
B1	Height - Rotating Beacon	3988 mm	(13 ft. 1 in.)
B2	Height - Load Light	4076 mm	(13 ft. 4 in.)
B3	Bin Height - Fully Tipped	7213 mm	(23 ft. 8 in.)
C	Width over Mudguards	3495 mm	(11 ft. 6 in.)
D	Width over Tyres - 26.5R25	3438 mm	(11 ft. 3 in.)
E	Tyre Track Width - 26.5R25	2768 mm	(9 ft. 1 in.)
F	Width over Bin	3112 mm	(10 ft 3 in.)
F1	Width over Tailgate	3402 mm	(11 ft 2 in.)
G	Width over Mirrors - Operating Position	3614 mm	(11 ft. 10 in.)
H	Ground Clearance - Artic	493 mm	(19.41 in.)
I	Ground Clearance - Front Axle	493 mm	(19.41 in.)
J	Ground Clearance - Bin Fully Tipped	822 mm	(32.4 in.)
K	Bin Lip Height - Transport Position	2463 mm	(8 ft. 1 in.)
L	Bin Length	5709 mm	(18 ft. 9 in.)
M	Load over Height	3084 mm	(10 ft. 1 in.)
N	Rear Axle Centre to Bin Rear	1545 mm	(5 ft.)
O	Mid Axle Centre to Rear Axle Centre	1950 mm	(6 ft. 5 in.)
P	Mid Axle Centre to Front Axle Centre	4438 mm	(14 ft. 7 in.)
Q	Front Axle Centre to Machine Front	3255 mm	(10 ft. 8 in.)
R	Front Axle Centre to Artic Centre	1558 mm	(5 ft. 1 in.)
S	Approach Angle	23 °	
T	Maximum Bin Tip Angle	70 °	
U	Maximum Articulation Angle	42 °	
V	Front Tie Down Height	1215 mm	(4 ft.)
W	Machine Lifting Centres	10655 mm	(34 ft. 11 in.)
X	Inner Turning Circle Radius - 26.5R25	4891 mm	(16 ft.)
Y	Outer Turning Circle Radius - 26.5R25	9211 mm	(30 ft. 3 in.)

Grade Ability/Rimpull

1. Determine tractive force by finding intersection of vehicle mass line and grade line.
   NOTE: 2% typical rolling resistance is already assumed in chart and grade line.
2. From this intersection, move straight right across charts until line intersects rimpull curve.
3. Read down from this point to determine maximum speed attained at that tractive resistance.

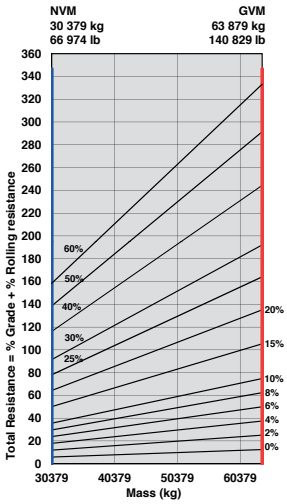

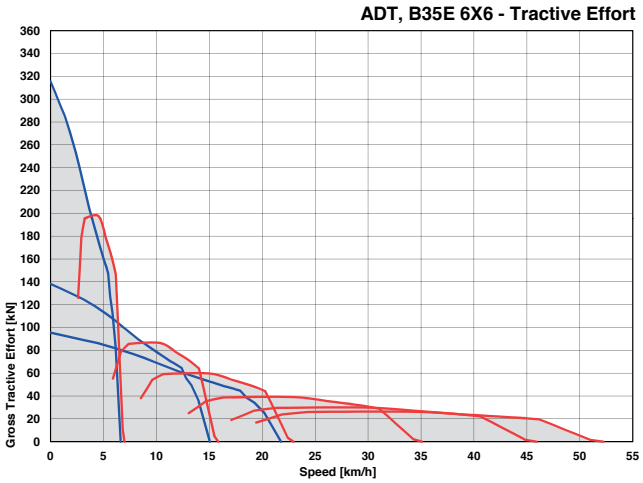

Retardation

1. Determine retardation force by finding intersection of vehicle mass line and grade line.
   NOTE: 2% typical rolling resistance is already assumed in chart and grade line.
2. From this intersection, move straight right across charts until line intersects the curve.
3. Read down from this point to determine maximum speed.

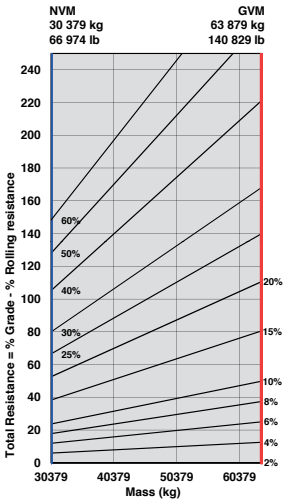

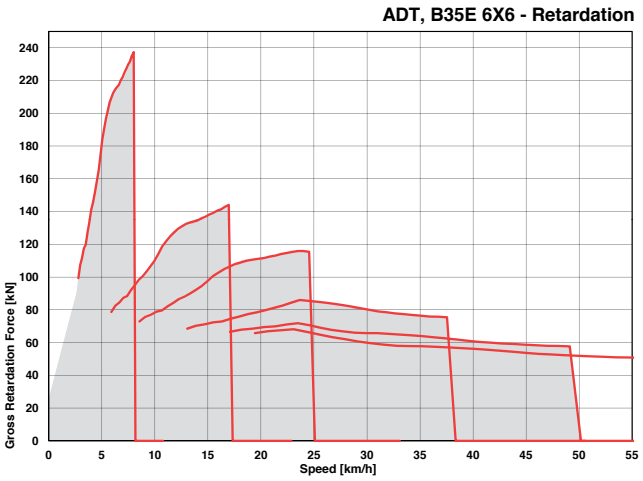

Technical Data - B40E

ENGINE

Manufacturer
Mercedes Benz (MTU)

Model
OM471LA (MTU 6R 1300)

Configuration
Inline 6, turbocharged and intercooled.

Gross Power
380 kW (510 hp) @ 1 700 rpm

Net Power
359 kW (481 hp) @ 1 700 rpm

Gross Torque
2 380 Nm (1 755 lbft) @ 1 300 rpm

Displacement
12,8 litres (781 cu.in)

Auxiliary Brake
Exhaust Valve Brake

Fuel Tank Capacity
352 litres (93 US gal)

AdBlue® Tank Capacity
40 litres (11 US gal)

Certification
OM471LA (MTU 6R 1300) meets EU Stage V emissions regulations

TRANSMISSION

Manufacturer
Allison

Model
4700 ORS

Configuration
Fully automatic planetary transmission.

Layout
Engine mounted

Gear Layout
Constant meshing planetary gears, clutch operated

Gears
7 Forward, 1 Reverse

Clutch Type
Hydraulically operated multi-disc

Control Type
Electronic

Torque Control
Hydrodynamic with lock-up in all gears.

TRANSFER CASE

Manufacturer
Kessler

Series
W2400

Layout
Remote mounted

Gear Layout
Three in-line helical gears

Output Differential
Interaxle 29/71 proportional differential. Automatic inter-axle differential lock.

AXLES

Manufacturer
Bell

Model
30T

Differential
High input controlled traction differential with spiral bevel gears

Final Drive
Outboard heavy duty planetary on all axles.

BRAKING SYSTEM

Service Brake
Dual circuit, full hydraulic actuation wet disc brakes on front and middle axles. Wet brake oil is circulated through a filtration and cooling system.

Maximum brake force:
327 kN (73 513 lbf)

Park & Emergency
Spring applied, air released driveline mounted disc.

Maximum brake force:
218 kN (49 008 lbf)

Auxiliary Brake
Automatic engine valve brake. Automatic retardation through electronic activation of wet brake system.

Total Retardation Power
Continuous: 442 kW (593 hp)
Maximum: 854 kW (1 145 hp)

WHEELS

Type
Radial Earthmover

Tyre
29.5 R 25 (875/65 R 29 optional)

FRONT SUSPENSION

Semi-independent, leading A-frame supported by hydro-pneumatic suspension struts.

Option: Electronically controlled adaptive suspension with ride height adjustment.

REAR SUSPENSION

Pivoting walking beams with laminated rubber suspension blocks.

Option: Comfort Ride suspension walking beams, with two-stage sandwich block.

HYDRAULIC SYSTEM

Full load sensing system serving the prioritized steering, body tipping and brake functions. A ground-driven, load sensing emergency steering pump is integrated into the main system.

Pump Type
Variable displacement load sensing piston

Flow
330 L/min (87 gal/min)

Pressure
315 bar (4 569 psi)

Filter
5 microns

STEERING SYSTEM

Double acting cylinders, with ground-driven emergency steering pump.

Lock to lock turns
5

Steering Angle
42°

DUMPING SYSTEM

Two double-acting, single stage, dump cylinders.

Raise Time
11 seconds

Lowering Time
6 seconds

Tipping Angle
70 deg standard, or any lower angle programmable

PNEUMATIC SYSTEM

Air drier with heater and integral unloader valve, serving park brake and auxiliary functions.

System Pressure
810 kPa (117 psi)

ELECTRICAL SYSTEM

Voltage
24 V

Battery Type
Two AGM (Absorption Glass Mat) type.

Battery Capacity
2 X 75 Ah

Alternator Rating
28V 80A

MAX. VEHICLE SPEED

1st	4 km/h	2,5 mph
2nd	9 km/h	6 mph
3rd	17 km/h	11 mph
4th	23 km/h	14 mph
5th	33 km/h	21 mph
6th	44 km/h	27,3 mph
7th	51 km/h	32 mph
R	7 km/h	4 mph

CAB

ROPS/FOPS certified 76 dBA internal sound level measured according to ISO 6396.

Load Capacity & Ground Pressure

OPERATING WEIGHTS		GROUND PRESSURE*		LOAD CAPACITY		OPTION WEIGHTS	
UNLADEN	kg (lb)	LADEN		BODY	m³ (yd³)		kg (lb)
Front	16 972 (37 417)	(No sinkage/Total Contact Area Method)		Struck Capacity	19 (25)	Bin liner	1 369 (3 018)
Middle	7 737 (17 057)	29.5 R 25	kPa (Psi)	SAE 2:1 Capacity	24 (31)	Tailgate	984 (2 169)
Rear	7 524 (16 588)	Front	310 (45)	SAE 1:1 Capacity	28,5 (37)	875/65 R29	
Total	32 233 (71 062)	Mid & Rear	341 (50)	SAE 2:1 Capacity		(per vehicle) Add	1 182 (2 606)
LADEN				with Tailgate	24,5 (32)		
Front	21 847 (48 164)	875/65 R29	kPa (Psi)			EXTRA WHEELSET	
Middle	24 800 (54 675)	Front	293 (43)	Rated Payload	39 000 kg	29.5 R 25	800 (1 764)
Rear	24 586 (54 203)	Mid & Rear	329 (48)		(85 980 lb)	875/65 R29	1 024 (2 258)
Total	71 233 (157 042)						

* 29.5R25 Groundpressures calculated with Michelin XADN+ Tyre. 875/65R29 Groundpressures calculated with Michelin XAD65-1 Tyre.

Dimensions

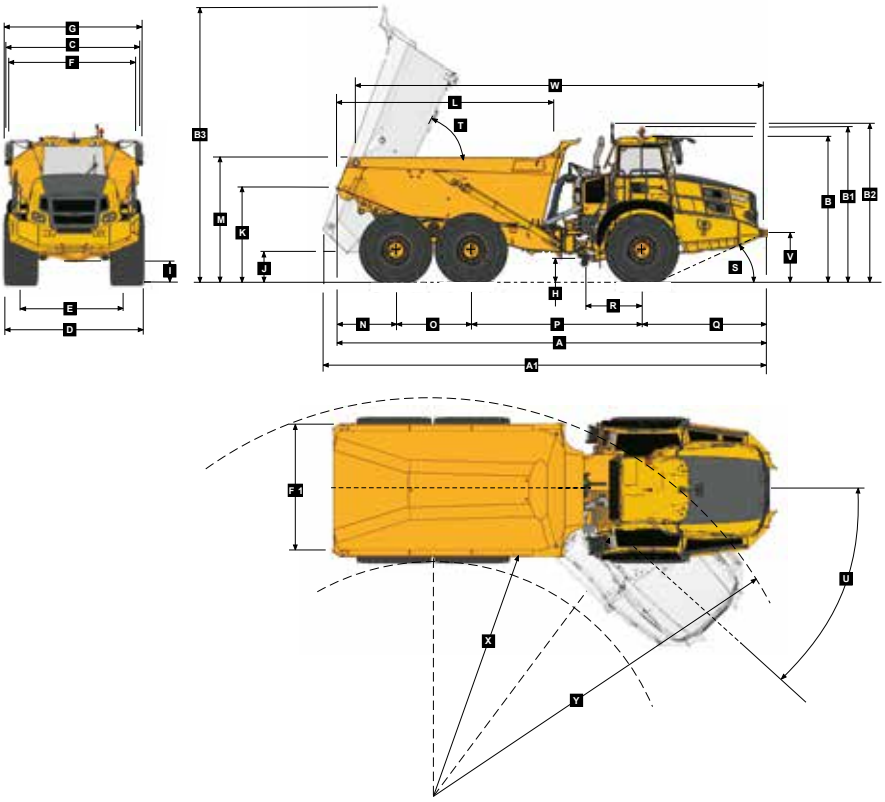

Machine Dimensions

A	Length - Transport Position with Tailgate	11197 mm	(36 ft. 9 in.)
A	Length - Transport position w/o Tailgate	11186 mm	(36 ft. 8 in.)
A1	Length - Bin Fully Tipped	11742 mm	(38 ft. 6 in.)
B	Height - Transport Position	3804 mm	(12 ft. 6 in.)
B1	Height - Rotating Beacon	4040 mm	(13 ft. 3 in.)
B2	Height - Load Light	4129 mm	(13 ft. 7 in.)
B3	Bin Height - Fully Tipped	7316 mm	(24 ft.)
C	Width over Mudguards	3495 mm	(11 ft. 6 in.)
D	Width over Tyres - 875/65 R29	3656 mm	(12 ft.)
D	Width over Tyres - 29.5R25	3487 mm	(11 ft. 5 in.)
E	Tyre Track Width - 875/65 R29	2773 mm	(9 ft. 1 in.)
E	Tyre Track Width - 29.5R25	2725 mm	(8 ft. 11 in.)
F	Width over Bin	3372 mm	(11 ft.)
F1	Width over Tailgate	3662 mm	(12 ft.)
G	Width over Mirrors - Operating Position	3614 mm	(11 ft. 10 in.)
H	Ground Clearance - Artic	545 mm	(21.46 in.)
I	Ground Clearance - Front Axle	545 mm	(21.46 in.)
J	Ground Clearance - Bin Fully Tipped	876 mm	(34.5 in.)
K	Bin Lip Height - Transport Position	2519 mm	(8 ft. 3 in.)
L	Bin Length	5742 mm	(18 ft. 10 in.)
M	Load over Height	3271 mm	(10 ft. 9 in.)
N	Rear Axle Centre to Bin Rear	1543 mm	(5 ft.)
O	Mid Axle Centre to Rear Axle Centre	1950 mm	(6 ft. 5 in.)
P	Mid Axle Centre to Front Axle Centre	4438 mm	(14 ft. 7 in.)
Q	Front Axle Centre to Machine Front	3255 mm	(10 ft. 8 in.)
R	Front Axle Centre to Artic Centre	1558 mm	(5 ft. 1 in.)
S	Approach Angle	24 °	
T	Maximum Bin Tip Angle	70 °	
U	Maximum Articulation Angle	42 °	
V	Front Tie Down Height	1265 mm	(4 ft. 2 in.)
W	Machine Lifting Centres	10594 mm	(34 ft. 9 in.)
X	Inner Turning Circle Radius - 875/65R29	4782 mm	(15 ft. 8 in.)
X	Inner Turning Circle Radius - 29.5R25	4866 mm	(16 ft.)
Y	Outer Turning Circle Radius - 875/65R29	9320 mm	(30 ft. 7 in.)
Y	Outer Turning Circle Radius - 29.5R25	9235 mm	(30 ft. 4 in.)

Grade Ability/Rimpull

1. Determine tractive force by finding intersection of vehicle mass line and grade line.
   NOTE: 2% typical rolling resistance is already assumed in chart and grade line.
2. From this intersection, move straight right across charts until line intersects rimpull curve.
3. Read down from this point to determine maximum speed attained at that tractive resistance.

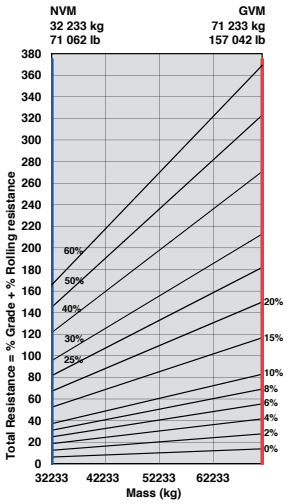

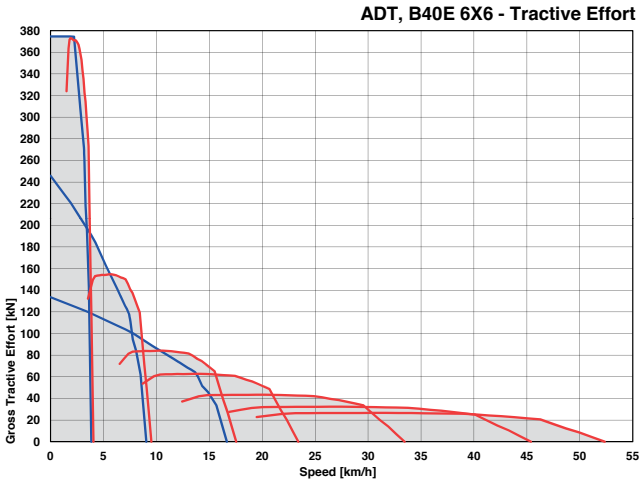

Retardation

1. Determine retardation force by finding intersection of vehicle mass line and grade line.
   NOTE: 2% typical rolling resistance is already assumed in chart and grade line.
2. From this intersection, move straight right across charts until line intersects the curve.
3. Read down from this point to determine maximum speed.

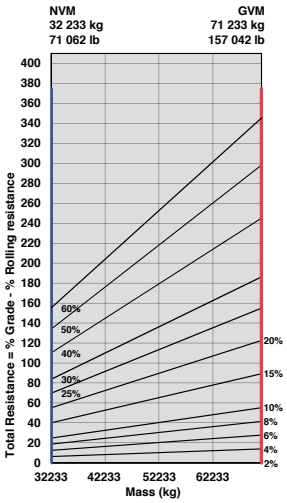

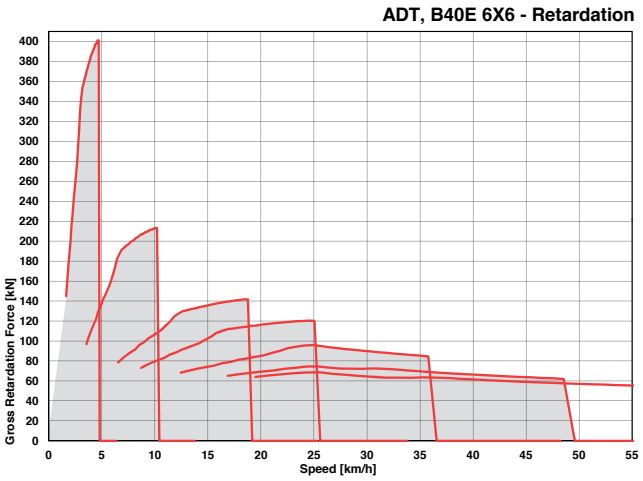

Technical Data - B45E

ENGINE

Manufacturer
Mercedes Benz (MTU)

Model
OM471LA (MTU 6R 1300)

Configuration
Inline 6, turbocharged and intercooled.

Gross Power
390 kW (523 hp) @ 1 700 rpm

Net Power
369 kW (495 hp) @ 1 700 rpm

Gross Torque
2 460 Nm (1 814 lbft) @ 1 300 rpm

Displacement
12,8 litres (781 cu.in)

Auxiliary Brake
Engine Valve Brake

Fuel Tank Capacity
352 litres (93 US gal)

AdBlue® Tank Capacity
40 litres (11 US gal)

Certification
OM471LA (MTU 6R 1300) meets EU Stage V emissions regulations

TRANSMISSION

Manufacturer
Allison

Model
4700 ORS

Configuration
Fully automatic planetary transmission.

Layout
Engine mounted

Gear Layout
Constant meshing planetary gears, clutch operated

Gears
7 Forward, 1 Reverse

Clutch Type
Hydraulically operated multi-disc

Control Type
Electronic

Torque Control
Hydrodynamic with lock-up in all gears.

TRANSFER CASE

Manufacturer
Kessler

Model
W2400

Layout
Remote mounted

Gear Layout
Three in-line helical gears

Output Differential
Interaxle 29/71 proportional differential. Automatic inter-axle differential lock.

AXLES

Manufacturer
Bell

Model
30T

Differential
High input controlled traction differential with spiral bevel gears

Final Drive
Outboard heavy duty planetary on all axles.

BRAKING SYSTEM

Service Brake
Dual circuit, full hydraulic actuation wet disc brakes on front and middle axles. Wet brake oil is circulated through a filtration and cooling system.

Maximum brake force:
327 kN (73 513 lbf)

Park & Emergency
Spring applied, air released driveline mounted disc.

Maximum brake force:
218 kN (49 008 lbf)

Auxiliary Brake
Automatic engine valve brake. Automatic retardation through electronic activation of wet brake system.

Total Retardation Power
Continuous: 442 kW (593 hp)
Maximum: 854 kW (1 145 hp)

WHEELS

Type
Radial Earthmover

Tyre
29.5 R 25 (875/65 R 29 optional)

FRONT SUSPENSION

Semi-independent, leading A-frame supported by hydro-pneumatic suspension struts.

Option: Electronically controlled adaptive suspension with ride height adjustment.

REAR SUSPENSION

Pivoting walking beams with laminated rubber suspension blocks.

Option: Comfort Ride suspension walking beams, with two-stage sandwich block.

HYDRAULIC SYSTEM

Full load sensing system serving the prioritized steering, body tipping and brake functions. A ground-driven, load sensing emergency steering pump is integrated into the main system.

Pump Type
Variable displacement load sensing piston

Flow
330 L/min (87 gal/min)

Pressure
315 bar (4 569 psi)

Filter
5 microns

STEERING SYSTEM

Double acting cylinders, with ground-driven emergency steering pump.

Lock to lock turns
5

Steering Angle
42°

DUMPING SYSTEM

Two double-acting, single stage, dump cylinders.

Raise Time
11 seconds

Lowering Time
6 seconds

Tipping Angle
70 deg standard, or any lower angle programmable

PNEUMATIC SYSTEM

Air drier with heater and integral unloader valve, serving park brake and auxiliary functions.

System Pressure
810 kPa (117 psi)

ELECTRICAL SYSTEM

Voltage
24 V

Battery Type
Two AGM (Absorption Glass Mat) type.

Battery Capacity
2 X 75 Ah

Alternator Rating
28V 80A

MAX. VEHICLE SPEED

1st	4 km/h	2,5 mph
2nd	9 km/h	6 mph
3rd	17 km/h	11 mph
4th	23 km/h	14 mph
5th	33 km/h	21 mph
6th	44 km/h	27,3 mph
7th	51 km/h	32 mph
R	7 km/h	4 mph

CAB

ROPS/FOPS certified 76 dBA internal sound level measured according to ISO 6396.

Load Capacity & Ground Pressure

OPERATING WEIGHTS		GROUND PRESSURE*		LOAD CAPACITY		OPTION WEIGHTS	
UNLADEN	kg (lb)	LADEN		BODY	m³ (yd³)		kg (lb)
Front	16 984 (37 443)	(No sinkage/Total Contact Area Method)		Struck Capacity	19,5 (25,5)	Bin liner	1 404 (3 095)
Middle	7 778 (17 148)	29.5 R 25	kPa (Psi)	SAE 2:1 Capacity	25 (33)	Tailgate	1 013 (2 233)
Rear	7 564 (16 676)	Front	321 (47)	SAE 1:1 Capacity	29,5 (38)	875/65 R29	
Total	32 326 (71 267)	Mid & Rear	370 (54)	SAE 2:1 Capacity		(per vehicle) Add	1 182 (2 606)
LADEN				with Tailgate	26 (34)		
Front	22 109 (48 742)	875/65 R29	kPa (Psi)			EXTRA WHEELSET	
Middle	25 715 (56 692)	Front	294 (43)	Rated Payload	41 000 kg	29.5 R 25	800 (1 764)
Rear	25 502 (56 222)	Mid & Rear	331 (48)		(90 390 lb)	875/65 R29	1 024 (2 258)
Total	73 326 (161 656)						

* 29.5R25 Groundpressures calculated with Michelin XADN+ Tyre. 875/65R29 Groundpressures calculated with Michelin XAD65-1 Tyre.

Dimensions

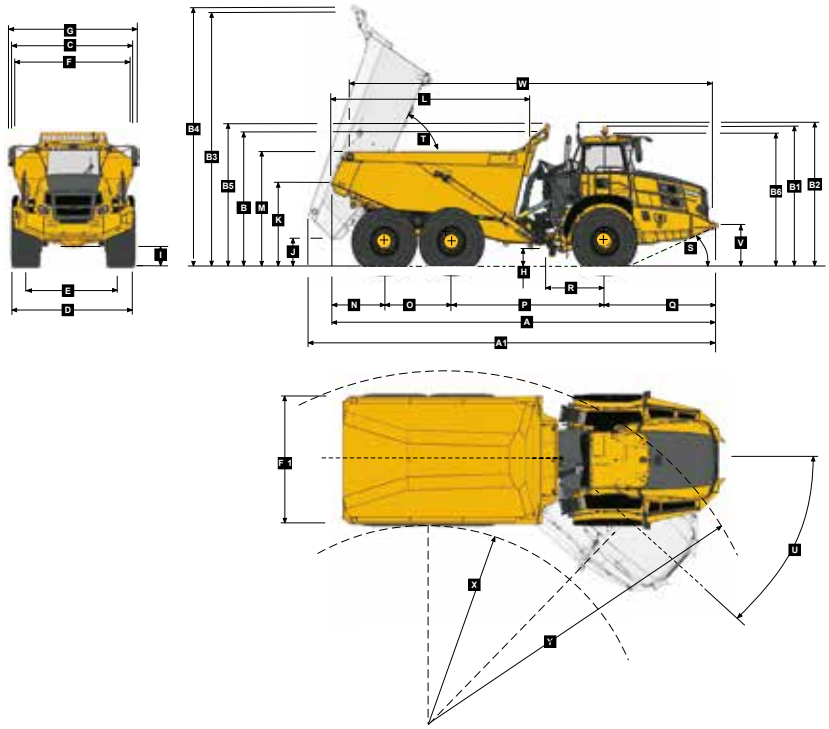

Machine Dimensions

A	Length - Transport Position with Tailgate	11184 mm	(36 ft. 8 in.)
A	Length - Transport Position w/o Tailgate	11184 mm	(36 ft. 8 in.)
A1	Length - Bin Fully Tipped	11778 mm	(38 ft. 8 in.)
B	Height - Transport Position w/o Rock Guard	3802 mm	(12 ft. 6 in.)
B	Height - Transport Position with Rock Guard	3844 mm	(12 ft. 7 in.)
B1	Height - Rotating Beacon	4038 mm	(13 ft. 3 in.)
B2	Height - Load Light	4127 mm	(13 ft. 6 in.)
B3	Bin Height - Fully Tipped w/o Rock Guard	7340 mm	(24 ft. 1 in.)
B4	Bin Height - Fully Tipped with Rock Guard	7448 mm	(24 ft. 5 in.)
B5	Height - Rock Guard Operating Position	4123 mm	(13 ft. 6 in.)
B6	Height - Cab	3802 mm	(12 ft. 6 in.)
C	Width over Mudguards	3495 mm	(11 ft. 6 in.)
D	Width over Tyres - 875/65 R29	3656 mm	(12 ft.)
D	Width over Tyres - 29.5R25	3487 mm	(11 ft. 5 in.)
E	Tyre Track Width - 875/65 R29	2773 mm	(9 ft. 1 in.)
E	Tyre Track Width - 29.5R25	2725 mm	(8 ft. 11 in.)
F	Width over Bin	3448 mm	(11 ft. 4 in.)
F1	Width over Tailgate	3738 mm	(12 ft. 3 in.)
G	Width over Mirrors - Operating Position	4027 mm	(13 ft. 3 in.)
H	Ground Clearance - Artic	545 mm	(21.46 in.)
I	Ground Clearance - Front Axle	543 mm	(21.34 in.)
J	Ground Clearance - Bin Fully Tipped	880 mm	(34.65 in.)
K	Bin Lip Height - Transport Position	2521 mm	(8 ft. 3 in.)
L	Bin Length	5753 mm	(18 ft. 10in.)
M	Load over Height	3316 mm	(10 ft. 11 in.)
N	Rear Axle Centre to Bin Rear	1540 mm	(5 ft.)
O	Mid Axle Centre to Rear Axle Centre	1950 mm	(6 ft. 5 in.)
P	Mid Axle Centre to Front Axle Centre	4438 mm	(14 ft. 7 in.)
Q	Front Axle Centre to Machine Front	3256 mm	(10 ft. 8 in.)
R	Front Axle Centre to Artic Centre	1558 mm	(ft. 1 in.)
S	Approach Angle	24 °	
T	Maximum Bin Tip Angle	70 °	
U	Maximum Articulation Angle	42 °	
V	Front Tie Down Height	1262 mm	(4 ft. 2 in.)
W	Machine Lifting Centres	10569 mm	(34 ft. 8 in.)
X	Inner Turning Circle Radius - 875/65R29	4782 mm	(15 ft. 8 in.)
X	Inner Turning Circle Radius - 29.5R25	4866 mm	(16 ft.)
Y	Outer Turning Circle Radius - 875/65R29	9320 mm	(30 ft. 7 in.)
Y	Outer Turning Circle Radius - 29.5R25	9235 mm	(30 ft. 4 in.)

Grade Ability/Rimpull

1. Determine tractive force by finding intersection of vehicle mass line and grade line.
   NOTE: 2% typical rolling resistance is already assumed in chart and grade line.
2. From this intersection, move straight right across charts until line intersects rimpull curve.
3. Read down from this point to determine maximum speed attained at that tractive resistance.

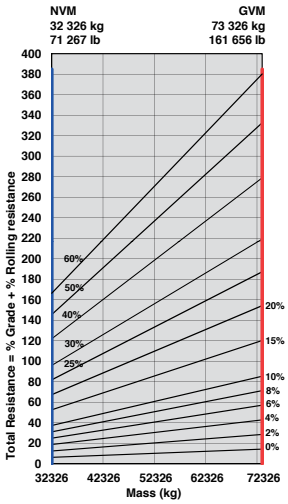

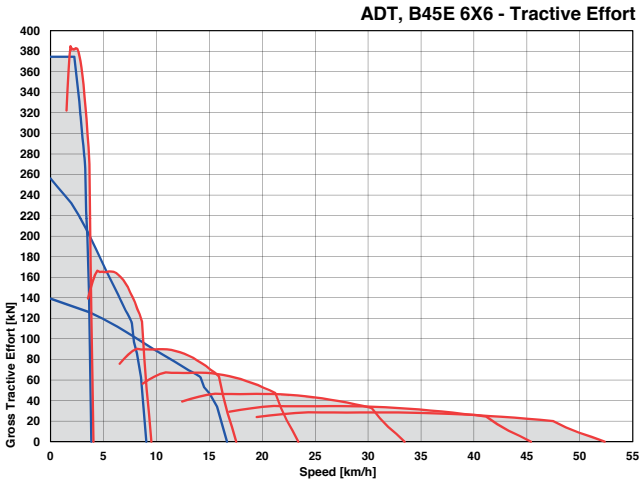

Retardation

1. Determine retardation force by finding intersection of vehicle mass line and grade line.
   NOTE: 2% typical rolling resistance is already assumed in chart and grade line.
2. From this intersection, move straight right across charts until line intersects the curve.
3. Read down from this point to determine maximum speed.

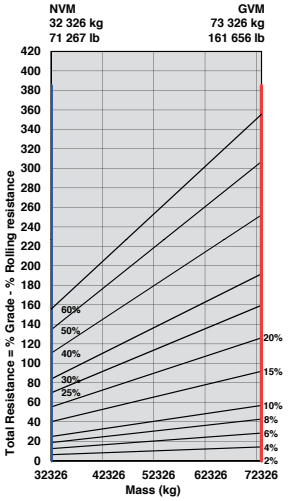

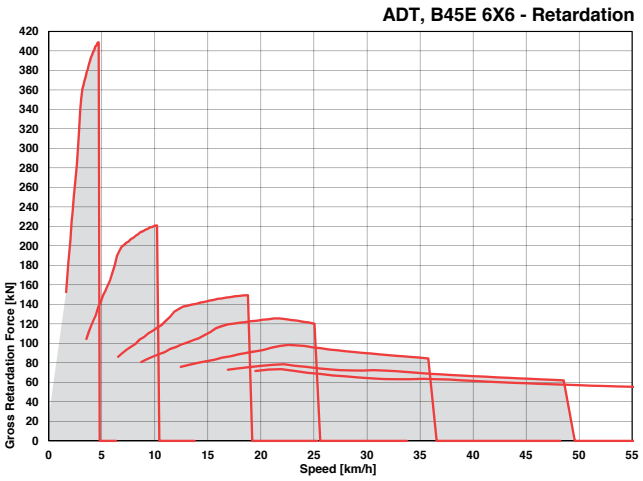

Technical Data - B50E

ENGINE

Manufacturer
Mercedes Benz (MTU)

Model
OM473LA (MTU 6R 1500)

Configuration
Inline 6, turbocharged and intercooled.

Gross Power
430 kW (577 hp) @ 1 700 rpm

Net Power
405 kW (543 hp) @ 1 700 rpm

Gross Torque
2 750 Nm (2 028 lbft) @ 1 300 rpm

Displacement
15,6 litres (952 cu.in)

Auxiliary Brake
Engine Valve Brake

Fuel Tank Capacity
494 litres (130 US gal)

AdBlue® Tank Capacity
40 litres (11 US gal)

Certification
OM473LA (MTU 6R 1500) meets EU Stage V emissions regulations

TRANSMISSION

Manufacturer
Allison

Model
4800 ORS

Configuration
Fully automatic planetary transmission.

Layout
Engine mounted

Gear Layout
Constant meshing planetary gears, clutch operated

Gears
7 Forward, 1 Reverse

Clutch Type
Hydraulically operated multi-disc

Control Type
Electronic

Torque Control
Hydrodynamic with lock-up in all gears.

TRANSFER CASE

Manufacturer
Kessler

Series
W2400

Layout
Remote mounted

Gear Layout
Three in-line helical gears

Output Differential
Interaxle 29/71 proportional differential. Automatic inter-axle differential lock.

AXLES

Manufacturer
Bell

Model
30T

Differential
High input controlled traction differential with spiral bevel gears

Final Drive
Outboard heavy duty planetary on all axles.

BRAKING SYSTEM

Service Brake
Dual circuit, full hydraulic actuation wet disc brakes on front, middle and rear axles. Wet brake oil is circulated through a filtration and cooling system.

Maximum brake force:
488 kN (109 707 lbf)

Park & Emergency
Spring applied, air released driveline mounted disc.

Maximum brake force:
215,5 kN (48 446 lbf)

Auxiliary Brake
Automatic engine valve brake. Automatic retardation through electronic activation of wet brake system.

Total Retardation Power
Continuous: 546 kW (732 hp)
Maximum: 963 kW (1 291 hp)

WHEELS

Type
Radial Earthmover

Tyre
875/65 R 29 (29.5 R 25 optional)

FRONT SUSPENSION

Semi-independent, leading A-frame supported by hydro-pneumatic suspension struts. Suspension is electronically controlled adaptive suspension with ride height adjustment.

REAR SUSPENSION

Pivoting walking beams with laminated rubber suspension blocks.

Option: Comfort Ride suspension walking beams, with two-stage sandwich block.

HYDRAULIC SYSTEM

Full load sensing system serving the prioritized steering, body tipping, suspension and brake functions. A ground-driven, load sensing emergency steering pump is integrated into the main system.

Pump Type
Variable displacement load sensing piston

Flow
330 L/min (87 gal/min)

Pressure
315 bar (4 569 psi)

Filter
5 microns

STEERING SYSTEM

Double acting cylinders, with ground-driven emergency steering pump.

Lock to lock turns
4,9

Steering Angle
42°

DUMPING SYSTEM

Two double-acting, single stage, dump cylinders.

Raise Time
11,5 seconds

Lowering Time
6 seconds

Tipping Angle
70 deg standard, or any lower angle programmable

PNEUMATIC SYSTEM

Air drier with heater and integral unloader valve, serving park brake and auxiliary functions.

System Pressure
810 kPa (117 psi)

ELECTRICAL SYSTEM

Voltage
24 V

Battery Type
Two AGM (Absorption Glass Mat) type.

Battery Capacity
2 X 75 Ah

Alternator Rating
28V 80A

MAX. VEHICLE SPEED

1st	4 km/h	2,5 mph
2nd	9 km/h	6 mph
3rd	17 km/h	11 mph
4th	23 km/h	14 mph
5th	33 km/h	21 mph
6th	44 km/h	27,3 mph
7th	51 km/h	32 mph
R	7 km/h	4 mph

CAB

ROPS/FOPS certified 77 dBA internal sound level measured according to ISO 6396.

Load Capacity & Ground Pressure

OPERATING WEIGHTS		GROUND PRESSURE*		LOAD CAPACITY		OPTION WEIGHTS	
UNLADEN	kg (lb)	LADEN		BODY	m^3 (yd^3)		kg (lb)
Front	18 484 (40 750)	(No sinkage/Total Contact Area Method)		Struck Capacity	21,5 (28)	Bin liner	1 495 (3 296)
Middle	8 648 (19 066)	875/65 R29	kPa (Psi)	SAE 2:1 Capacity	27,5 (36)	Tailgate	1 117 (2 463)
Rear	8 543 (18 834)	Front	296 (43)	SAE 1:1 Capacity	33 (43)	29.5 R 25	
Total	35 675 (78 650)	Mid & Rear	366 (53)	SAE 2:1 Capacity		(per vehicle) Minus	1 182 (2 606)
LADEN				with Tailgate	29 (38)		
Front	24 204 (53 361)	29.5 R 25	kPa (Psi)			EXTRA WHEELSET	
Middle	28 488 (62 805)	Front	326 (47)	Rated Payload	45 400 kg	29.5 R 25	800 (1 764)
Rear	28 383 (62 574)	Mid & Rear	395 (57)		(100 090 lb)	875/65 R29	1 024 (2 258)
Total	81 075 (178 740)						

* 29.5R25 Groundpressures calculated with Michelin XADN+ Tyre. 875/65 R29 Groundpressures calculated with Michelin XAD65-1 Tyre.

Dimensions

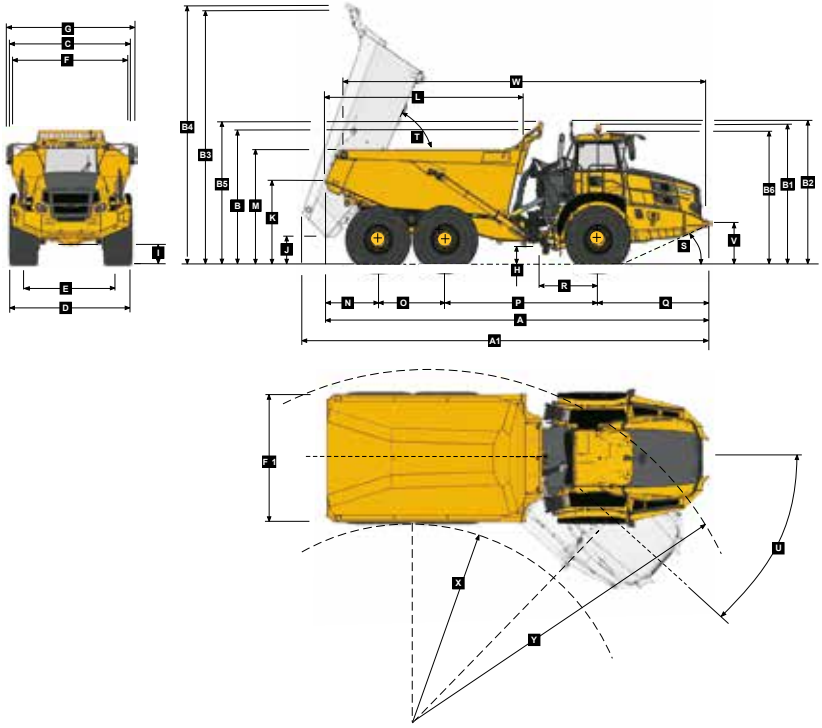

Machine Dimensions

A	Length - Transport Position with Tailgate	11272 mm	(37 ft.)
A	Length - Transport Position w/o Tailgate	11272 mm	(37 ft.)
A1	Length - Bin Fully Tipped	11916 mm	(39 ft. 1 in.)
B	Height - Transport Position w/o Rock Guard	3822 mm	(12 ft. 6 in.)
B	Height - Transport Position with Rock Guard	3870 mm	(12 ft. 8 in.)
B1	Height - Rotating Beacon	4050 mm	(13 ft. 3 in.)
B2	Height - Load Light	4141 mm	(13 ft. 7 in.)
B3	Bin Height - Fully Tipped w/o Rock Guard	7325 mm	(24 ft.)
B4	Bin Height - Fully Tipped with Rock Guard	7430 mm	(24 ft. 5 in.)
B5	Height - Rock Guard Operating Position	4148 mm	(13 ft. 7 in.)
B6	Height - Cab	3813 mm	(12 ft. 6 in.)
C	Width over Mudguards	3790 mm	(12 ft. 5 in.)
D	Width over Tyres - 875/65 R29	3832 mm	(12 ft. 7 in.)
D	Width over Tyres - 29.5R25	3714 mm	(12 ft. 2 in.)
E	Tyre Track Width - 875/65 R29	2949 mm	(9 ft. 8 in.)
E	Tyre Track Width - 29.5R25	2952 mm	(9 ft. 8 in.)
F	Width over Bin	3735 mm	(12 ft. 3 in.)
F1	Width over Tailgate	4057 mm	(13 ft. 4 in.)
G	Width over Mirrors - Operating Position	4027 mm	(13 ft. 3 in.)
H	Ground Clearance - Artic	558 mm	(21.97 in.)
I	Ground Clearance - Front Axle	555 mm	(21.85 in.)
J	Ground Clearance - Bin Fully Tipped	907 mm	(35.71 in.)
K	Bin Lip Height - Transport Position	2542 mm	(8 ft. 4 in.)
L	Bin Length	5714 mm	(18 ft. 9 in.)
M	Load over Height	3390 mm	(11 ft. 1 in.)
N	Rear Axle Centre to Bin Rear	1533 mm	(5 ft.)
O	Mid Axle Centre to Rear Axle Centre	1950 mm	(6 ft. 5 in.)
P	Mid Axle Centre to Front Axle Centre	4438 mm	(14 ft. 7 in.)
Q	Front Axle Centre to Machine Front	3351 mm	(11 ft.)
R	Front Axle Centre to Artic Centre	1558 mm	(5 ft. 1 in.)
S	Approach Angle	23 °	
T	Maximum Bin Tip Angle	70 °	
U	Maximum Articulation Angle	42 °	
V	Front Tie Down Height	1269 mm	(4 ft. 2 in.)
W	Machine Lifting Centres	10632 mm	(34 ft. 11 in.)
X	Inner Turning Circle Radius - 875/65R29	4694 mm	(15 ft. 5 in.)
X	Inner Turning Circle Radius - 29.5R25	4753 mm	(15 ft. 7 in.)
Y	Outer Turning Circle Radius - 875/65R29	9408 mm	(30 ft. 10 in.)
Y	Outer Turning Circle Radius - 29.5R25	9349 mm	(30 ft. 8 in.)

Grade Ability/Rimpull

1. Determine tractive force by finding intersection of vehicle mass line and grade line.
   NOTE: 2% typical rolling resistance is already assumed in chart and grade line.
2. From this intersection, move straight right across charts until line intersects rimpull curve.
3. Read down from this point to determine maximum speed attained at that tractive resistance.

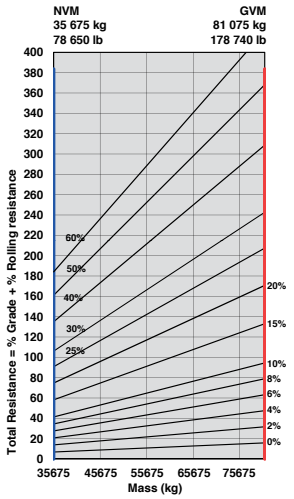

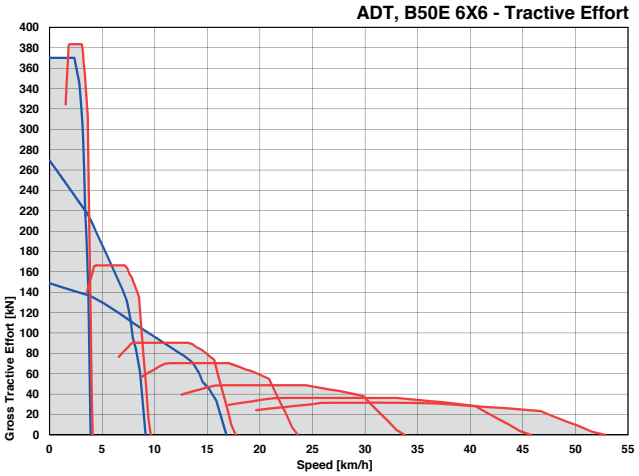

Retardation

1. Determine retardation force by finding intersection of vehicle mass line and grade line.
   NOTE: 2% typical rolling resistance is already assumed in chart and grade line.
2. From this intersection, move straight right across charts until line intersects the curve.
3. Read down from this point to determine maximum speed.

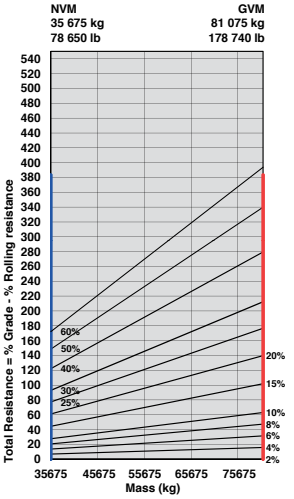

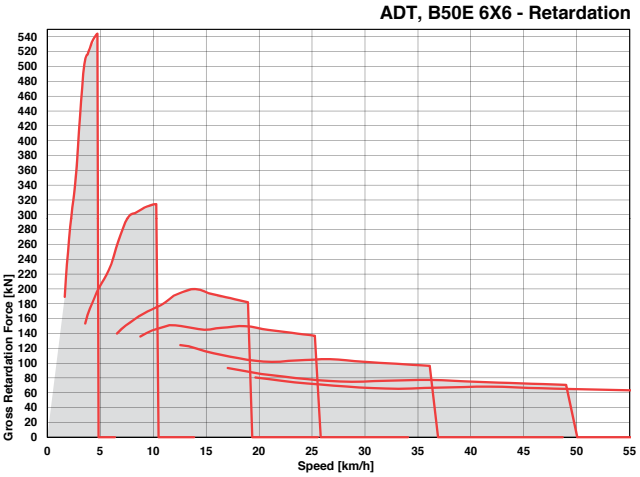

Features and Options

● STANDARD ▲ OPTION

B35E	B40E	B45E	B50E	
				ENGINE
●	●	●	●	Engine valve brake
●	●	●	●	Dual element air cleaner with dust ejector valve
●	●	●	●	Precleaner with automatic dust scavenging
●	●	●	●	Water separator
●	●	●	●	Serpentine drive belt with automatic tensioner
●	●	●	●	Provision for fast fill
●	●	●	●	Wet-sleeve cylinder liners
				COOLING
●	●	●	●	Crankshaft mounted electronically controlled viscous fan drive
●	●	●	●	Fan guard
				PNEUMATIC SYSTEM
●	●	●	●	Engine-mounted compressor
●	●	●	●	Air drier with heater
●	●	●	●	Integral unloader valve
				ELECTRICAL SYSTEM
●	●	●	●	Battery disconnect
●	●	●	●	Halogen drive lights
▲	▲	▲	▲	LED drive lights
●	●	●	●	Air horn
●	●	●	●	Reverse alarm
▲	▲	▲	▲	White noise reverse alarm
●	●	●	●	Rotating beacon
●	●	●	●	Pitch Roll Sensor
●	●	●	●	Halogen Artic reverse light
▲	▲	▲	▲	LED Artic reverse light
●	●	●	●	LED reverse lights
				STEERING SYSTEM
●	●	●	●	Bi-directional ground-driven secondary steering pump
				CAB
●	●	●	●	ROPS/FOPS certification
●	●	●	●	Tilt cab
●	●	●	●	Gas strut-supported door
●	●	●	●	I-Tip programmable dump-body tip settings
●	●	●	●	HVAC Climate control system
●	●	●	●	AM/FM radio with Aux + USB
●	●	●	●	Rear window guard
●	●	●	●	Wiper/washer with intermittent control
●	●	●	●	Tilt and telescoping steering wheel
●	●	●	●	Centre-mount air-suspension seat
●	●	●	●	Halogen work lights
▲	▲	▲	▲	LED work lights
▲	▲	▲	▲	Rotating beacon: seat belt installation
▲	▲	▲	▲	Remote engine and machine isolation
●	●	●	●	Remote battery jump start
●	●	●	●	Retractable 3 point seat belt
●	●	●	●	Heated seat
●	●	●	●	Foldaway trainer seat with retractable seat belt
●	●	●	●	12-volt power outlet
●	●	●	●	Cab utility bin (removable)
●	●	●	●	Cup holder
●	●	●	●	Cooled/heated lunch box

● STANDARD ▲ OPTION

B35E	B40E	B45E	B50E	
				CAB (continued)
				Manually adjusted mirrors
				Heated mirrors
●	●	●	●	Electrically adjusted and heated mirrors
●	●	●	●	Deluxe 10” colour LCD: Speedometer / Fuel gauge / Transmission oil temperature gauge / Engine coolant temperature gauge / LED function/warning indicators and audible alarm / Transmission gear selection / Tachometer / Battery voltage / Hour meter / Odometer / Fuel consumption / Tip counter / Trip timer / Trip distance / Metric/English units / Service codes/diagnostics
●	●	●	●	Backlit sealed switch module functions with: Wiper control / Lights / Heated mirrors / Retarding aggressiveness / Transfer case differential lock / Transmission gear hold / Dump-body tip limit / Automatic dump-body tip settings / Airconditioner/ Heater controls / Preselected Speed Control
				DUMP BODY
●	●	●	●	Dump body mechanical locks (x2). Partially up and fully up
▲	▲	▲	▲	Body liner
▲	▲	▲	▲	Tailgate
▲	▲	▲	▲	Body heater
▲	▲	▲	▲	Less dump body and cylinders
▲	▲	▲	▲	Low SG bin extensions
▲	▲	▲	▲	Bin pole lockout
				OTHER
●	●	●	●	Automatic Traction Control (ATC)
●	●	●	●	Wet disc brakes
●				26.5 R 25 Radial Earthmover tyres
	●	●	▲	29.5 R 25 Radial Earthmover tyres
	▲	▲	●	875/65 R 29 Radial Earthmover tyres
●	●	●		Remote grease banks
▲	▲	▲	●	Automatic greasing
●	●	●	●	Onboard weighing
▲	▲	▲	▲	Load lights: stack
▲	▲	▲	●	Comfort ride suspension (Front)
▲	▲	▲	▲	Comfort ride suspension (Rear)
●	●	●	●	Reverse camera
●	●	●	●	Hand rails
●	●	●	●	Cab peak
▲	▲	▲	▲	High pressure hydraulic filter
▲	▲	▲	▲	Fuel heater
●	●	●	●	Belly cover
▲	▲	▲	▲	Remote transmission filters
	●	●	●	Engine and transmission remote drain-gravity
	▲	▲	▲	Engine and transmission remote drain-scavenge
▲	▲	▲	▲	Window smash button
●	●	●	●	High visibility mirrors
●	●	●	●	Fleetm@tic® Classic Package for 2 years
●	●	●	●	Electronic bonnet opening

The compilation of standard and optional equipment may vary by market region. Please check with your local distributor.

Notes

All dimensions are shown in millimetres, unless otherwise stated between brackets. Under our policy of continuous improvement, we reserve the right to change technical data and design without prior notice. Photographs featured in this brochure may include optional equipment. Blu@dvantage™ is a trademark of Bell Equipment Co. (PTY) Ltd AdBlue® is a registered trademark of VDA.

BELL INTERNATIONAL: Tel: +27 (0)35-907 9431
E-mail: marketing@bellequipment.com Web: www.bellequipment.com

Tel: +61 (0)8-9355-2442
Tel: +49 (0)6631 / 91-13-0
Tel: +27 (0)11-928-9700
Tel: +44 (0)1283-712862
Tel: +33 (0)5-55-89-23-56
Tel: +7-495-287-80-02
Tel: (704) 655 2802

Strong Reliable Machines
Strong Reliable Support

BELL

1430-Brochr23280919, E-series ADT Mk 3, Stage V (B35E-B60E) - English